ELUSIA
MODERN LIGHTS

ZUMA LINE

collection 2019/2020

AMEDEO 14-15

CORNELIO 16

ALMERIA 17

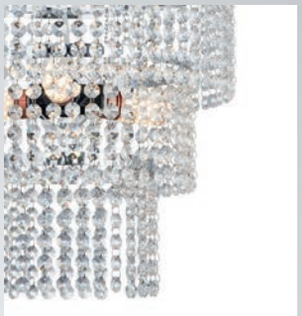
CORIA 18

CEUTA 19

ROTA 20

SORIA 21

CORATO 22-25

VENTUS 26-27

PECTRA 28-29

ANZIO 30-31

PRINCE 32-33

ANTARCTICA 34-35

JASMINE 36

BELLA 37

CENTAURUS 38-39

GEM 40-43

CRYSTAL 44-52

BIAGIO 53

RAIN 54-59

VISTA 60-64

MINAS 65

PIOLI 66-67

AURELIA 68-69

PERLE 70-72

CIRO 73

ARTEMIDA 74-75

BLINK 76-79

JEWELLERY 80-81

ROCK 82-84

SILA 85

BRESSO 86-87

MOON 88-89

VIDRO 90-91

LIBRA 92-95

CHAMPAGNE 96-98

VERO 99

MONIC 100-103

BERO 104-105

MUSCA 106

GOBLET 107

NAOMI 108-109

RIANO 110-113

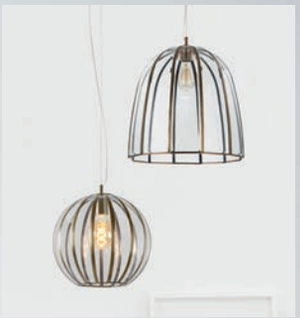
RAME 114-115

DONATO 116-117

CHANDELIER 118-119

WIRE 120-123

TANGO 124-127

PICO 128-133

FILO 134

SKELETON 135

ROD 136

GRID 137

TORCH 138-139

ATOM 138-139

STAG 138-139

CANDEL 140

NOVIA 141

SOLE 142-145

GIANNA 146-147

CESARE 148-149

ANDREA 150-151

REA 152-153

CANDE 154-155

DOTS 156

MARCO 157

ANTENNE 158-161

LUZIA 162

BRANCA 163

ZODIAC 164-165

VENTI 166

SOHO 167

VISION 168

GLAM 169

MADISON 170-171

MANHATTTAN 171

AMADO 172-173

NEW YORK 174

BELLO 175

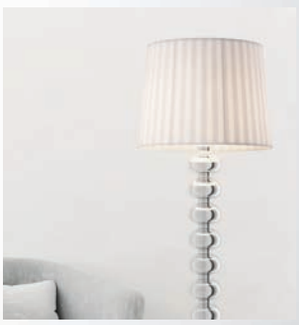
DECO 176-177

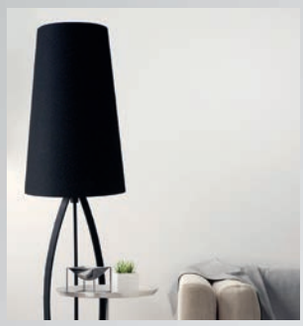
LORITA 178-179

COSTANZA 180-181

HUGO 182

SEVILLE 183

MARESCA 184

PEDRO 185

ENERGY 186

MILO 187

LOYA 188-193

ONE 194-196

STONE 197

LIMA 198-199

FALCON 200

LUIS 201

VALENTI 202-203

SEDA 204-205

BALVI 206-207

PERIA 208-209

DARIO 210-211

CLORIN 212

MERLO 213

PONTA 214-215

PISTA 216-217

CROSS 218

MEDEL 219

MAURO 220-221

BELLE 222-223

LUMINO 224-225

CARRELLO 226-227

RESINA 228

TREN 229

CIRCLE 230-232

FLAT CIRCLE 234

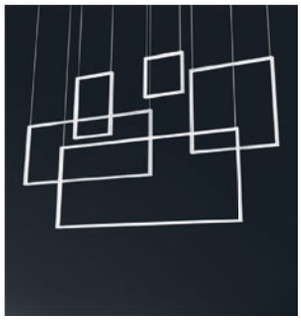
RECTAN 235

DORIS 236-237

ENZO 238-239

SCROLL 240-241

LINA 242

ALTA 243

ADEM 244

ASCONA 255

BELLIS 246-247

SIERRA 248-249

LEXI 250-251

PLATT 252-253

SICA 254

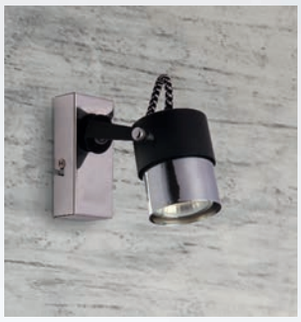
RAO 255

SPAZIO 256-257

TOLO 258

COSTA 259

MOLI 260

ALEX 261

RAVA 262

REDON 263

ELIA 264

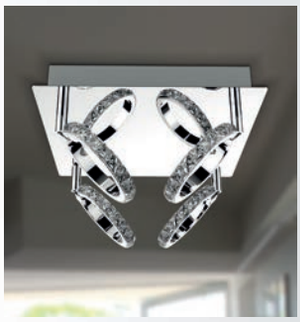
TOLEDO 265

MARTIN 266

OSCAR 267

SPARKLES 268

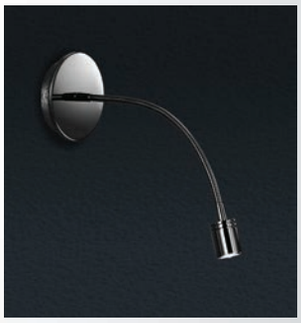
SIMPLE 269

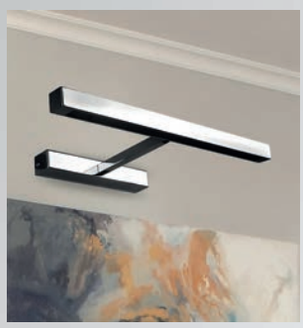

IMPRESS 270

TORNADO 271

LUXE 272

TUBO WL 272

SLICE WL 273

SECTION 273

SANDY 274

SANDY 274

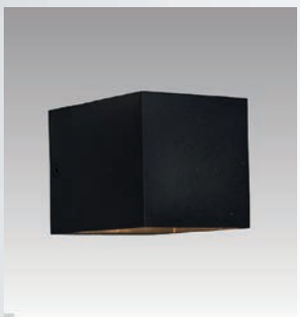

TRANSFER WL 275

TRANSFER WL 2 275

SOLA WL 276

SOLA WL 276

OTAN 277

POLYGON WL 278

SQUARE 279

POLYGON 280-281

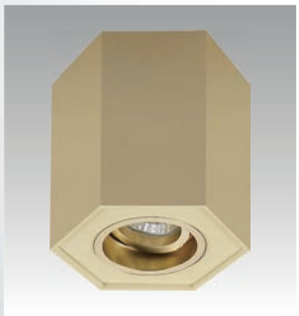

POLYGON CL R 282

POLYGON CL 1 283

RONDOO SL 284

DEEP SL 285

RONDOC 285

QUADRO 286

QUADRY SL 1 286

BOX 287

TUBIA SL 288

TUBY SL 288

PARC SL 289

QUBY SL 289

RONBOX SL 290

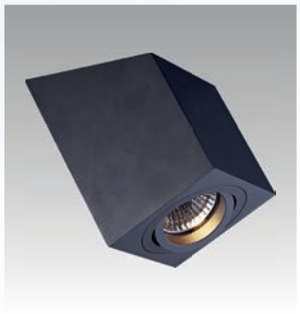
RONCUB SL 290

RONDUO SL 291

RONTUB SL 291

GINO DL 292

GO SL 293

LOMO SL 294

LOMO CL 294

TUBA SL 295

TUBA HL 295

TORI SL 3 296

TORI SL 1 296

TORI SL 2 296

TORI SL 297

ONEON 297–298

BOXY DL 299

BOXY CL 300

MAC SL 301

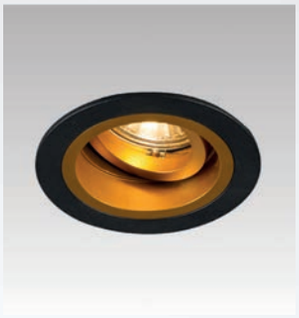
CHUCK DL 302

ACTION 305

AMEDEO

Strojna konstrukcja zapewniająca fantastyczną grę świateł i cieni. Modele szczególnie polecane do zawieszenia w salonie lub sypialni.

Decorative design that provides a fantastic interplay of lights and shadows. Models especially recommended for use in the living room or bedroom.

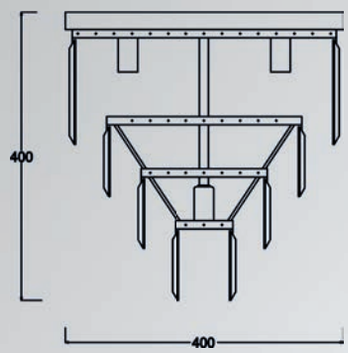

AMEDEO
Ceiling lamp
FC17106/4+1-CHR
5xE14 MAX 40W
clear crystal glass
chrome body

AMEDEO
Ceiling lamp
FC17106/4+1-GLD
5xE14 MAX 40W
clear crystal glass
gold body

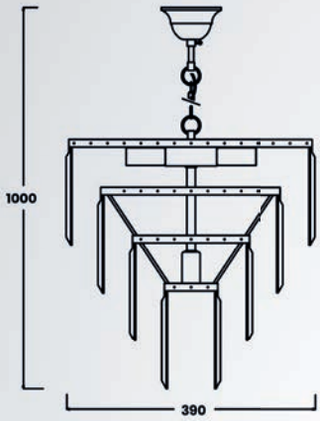

AMEDEO
Pendant lamp
17106/4+1-CHR
5xE14 MAX 40W
clear crystal glass
chrome body

AMEDEO
Pendant lamp
17106/4+1-GLD
5xE14 MAX 40W
clear crystal glass
gold body

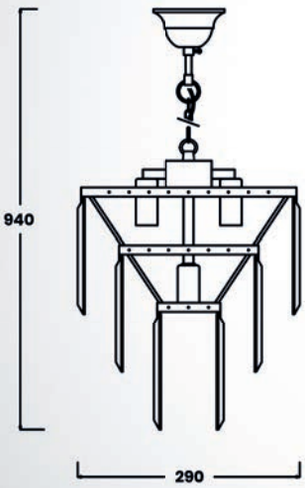

AMEDEO
Pendant lamp
17106/3+1-CHR
4xE14 MAX 40W
clear crystal glass
chrome body

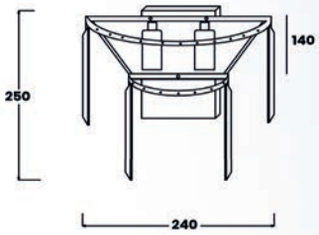

AMEDEO
Wall lamp
17106/2W-GLD
2xE14 MAX 40W
clear crystal glass
gold body

AMEDEO
Wall lamp
17106/2W-CHR
2xE14 MAX 40W
clear crystal glass
chrome body

CORNELIO

Pendant lamp
17106/4+4+1-GLD
9xE14 MAX 40W
clear crystal glass
gold body

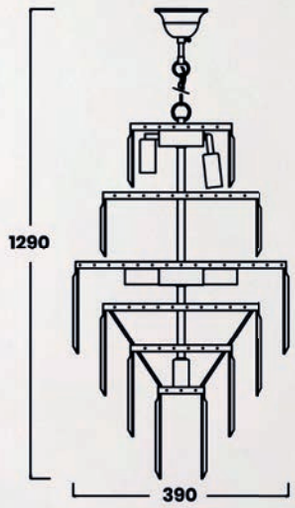

ALMERIA

Pendant lamp
YSC01
3xE27 MAX 60W
clear crystal glass
chrome body

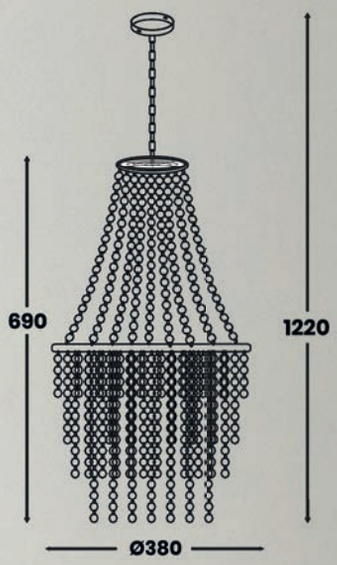

ZUMALINE

CORIA

Pendant lamp
YSC06
3xE27 MAX 60W
clear crystal glass
chrome body

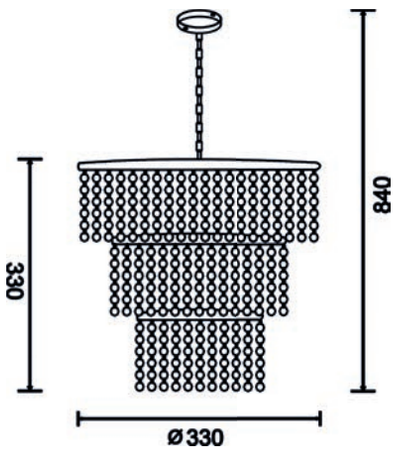

CEUTA

Pendant lamp
YSC04
3xE27 MAX 60W
clear crystal glass
chrome body

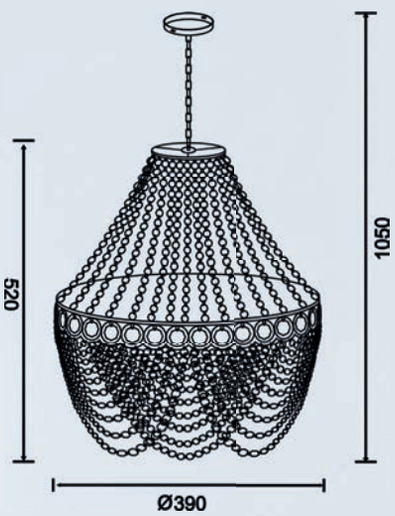

ZUMALINE

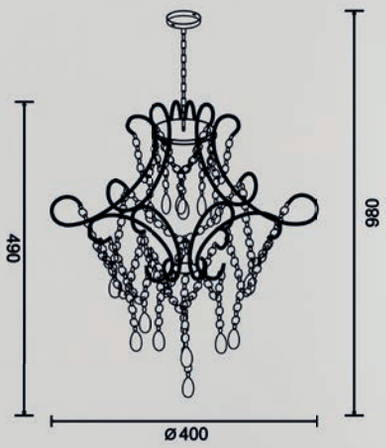

ROTA

Pendant lamp
YSC14
3xE14 MAX 60W
clear crystal glass
chrome body

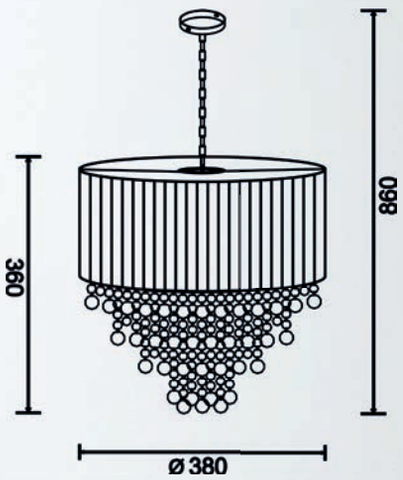

SORIA

Pendant lamp
YSC23
3xE27 MAX 60W
metal body, black stripes textil shade
with clear crystal glass inside

ZUMALINE

CORATO

Propozycja stylu glamour, świetnie nadająca się do szykownych salonów, gustownych butików czy eleganckich jadalni.

This glamorous look is perfect for stylish boutiques or elegant dining rooms.

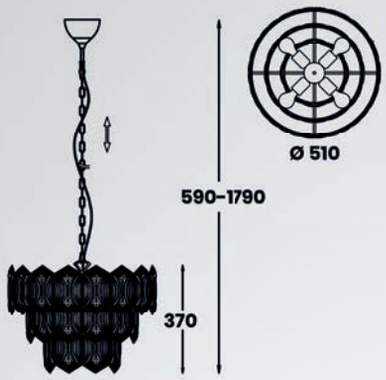

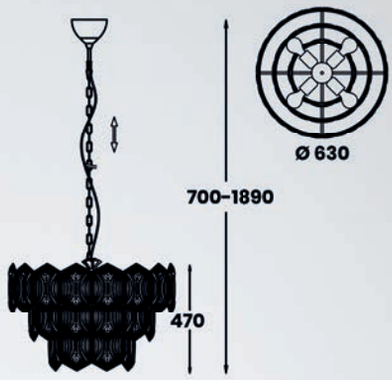

CORATO
Pendant lamp
P0475-05A-F4AC
5xE27 MAX 40W
metal chrome body
glass plates

CORATO
Pendant lamp
P0475-06A-F4AC
6xE27 MAX 40W
metal chrome
body
glass plates

CORATO
Pendant lamp
P0475-06A-F7AC
6xE27 MAX 40W
metal gold body
glass plates

CORATO
Wall lamp
W0475-02A-F4AC
2xG9 MAX 42W
metal chrome body
glass plates

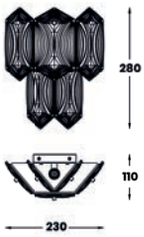

CORATO
Wall lamp
W0475-02A-F7AC
2xG9 MAX 42W
metal gold body
glass plates

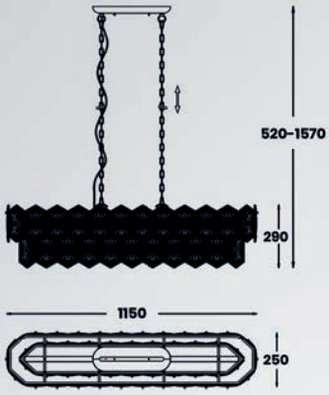

CORATO
Pendant lamp
P0475-15C-F4AC
15xG9 MAX 8W
metal chrome body
glass plates

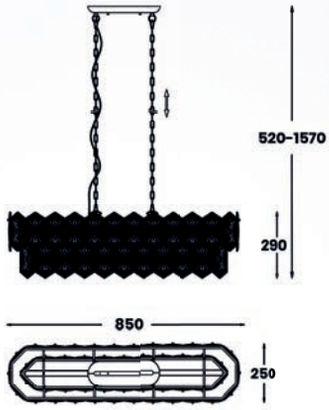

CORATO
Pendant lamp
P0475-10C-F7AC
10xG9 MAX 8W
metal gold body
glass plates

CORATO
Pendant lamp
P0475-10C-F4AC
10xG9 MAX 8W
metal chrome body
glass plates

VENTUS

Kryształowa konstrukcja pasuje do przestronnych pomieszczeń, w których stanie się głównym elementem dekoracyjnym.

The crystal structure fits into the spacious rooms where it will become the main decorative element.

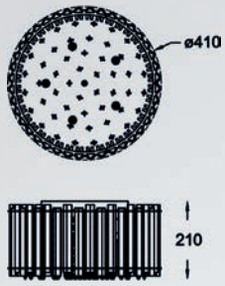

VENTUS
Ceiling lamp
C0465-05C-B5AC
5xG9 MAX 42W
clear crystal glass
chrome body

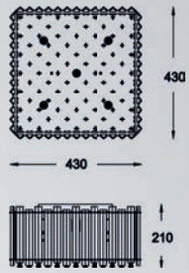

VENTUS
Ceiling lamp
C0465-05D-B5AC
5xG9 MAX 42W
clear crystal glass
chrome body

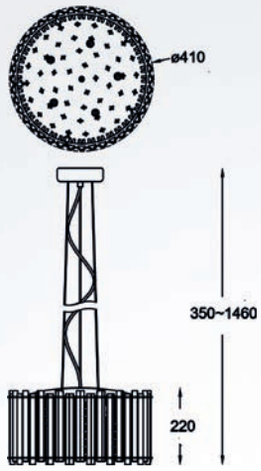

VENTUS
Pendant lamp
P0465-05C-F4AC
5xG9 MAX 42W
clear crystal glass
chrome body

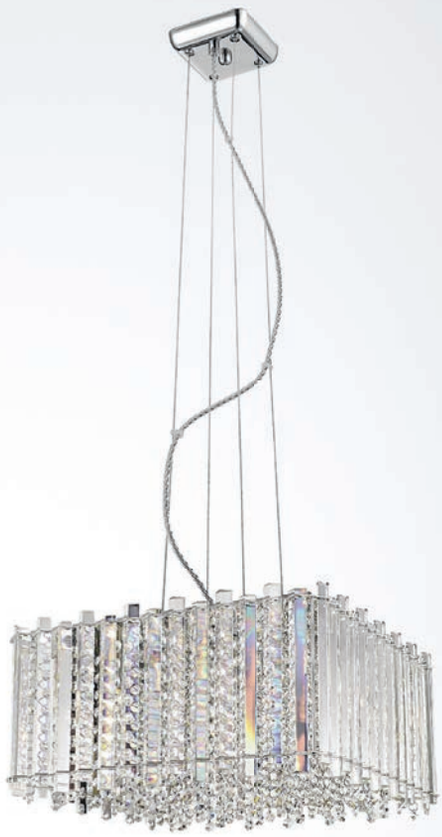

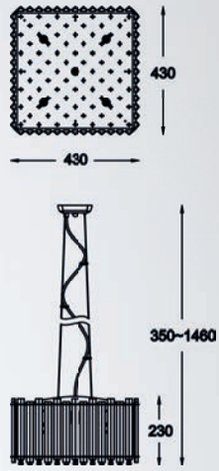

VENTUS
Pendant lamp
P0465-05D-F4AC
5xG9 MAX 42W
clear crystal glass
chrome body

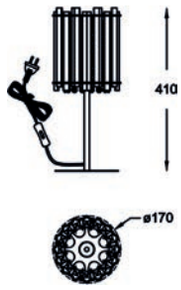

VENTUS
Table lamp
T0465-01A-F4AC
1xE27 MAX 60W
clear crystal glass
chrome body

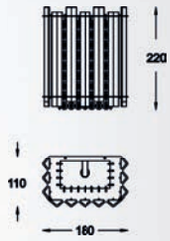

VENTUS
Wall lamp
W0465-01B-B5AC
1xG9 MAX 42W
clear crystal glass
chrome body

PECTRA

Bogato zdobiony klosz wykonany z metalu o ażurowym wzorze i kryształowych zdobieniach sprawia, że lampy nadają wnętrzu charakteru oraz niepowtarzalnego stylu.

Well-decorated lamp shade made of metal with openwork pattern and crystal decorations makes the lamps give the interior a character and unique style.

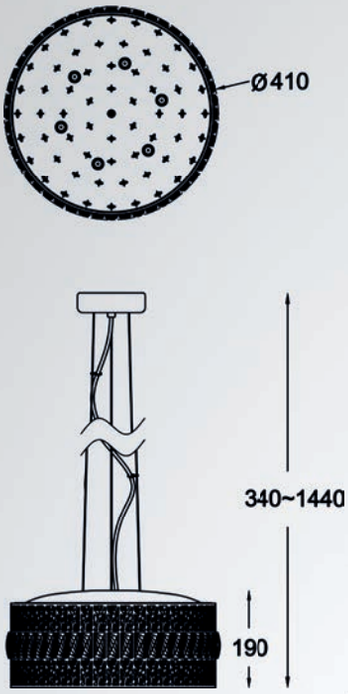

PECTRA
Pendant lamp
P0472-06A-F4AC
6xG9 MAX 42W
metal chrome body with
small crystals inside

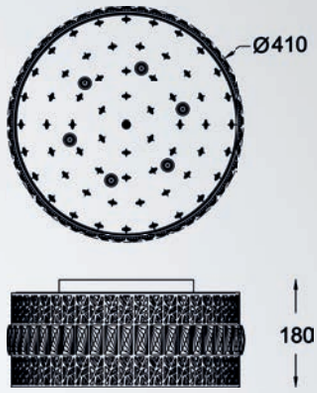

PECTRA
Ceiling lamp
C0472-06A-B5AC
6xG9 MAX 42W
metal chrome body with
small crystals inside

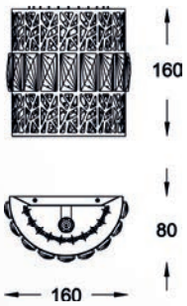

PECTRA
Wall lamp
W0472-01A-B5AC
1xG9 MAX 42W
metal chrome body with
small crystals inside

ANZIO

Bogato zdobiona seria idealna dla miłośników stylu glamour. Doskonale sprawdzi się w gustownych przestrzeniach domowych i komercyjnych.

The series is very well decorated and ideal for glamour lovers. Perfect for stylish home and commercial spaces.

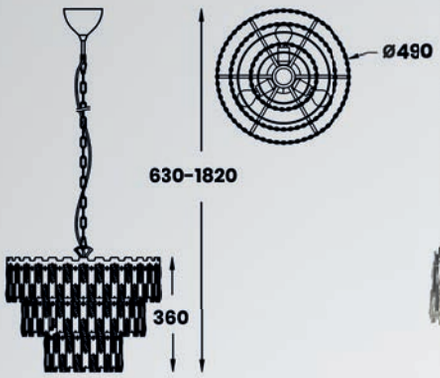

ANZIO
Pendant lamp
P0480-04A-F4AC
4xE27 MAX 40W
metal chrome body, chrome
metal plates, clear crystal glass

ANZIO
Pendant lamp
P0480-04A-F4D7
4xE27 MAX 40W
metal chrome body, gold
metal plates, clear crystal glass

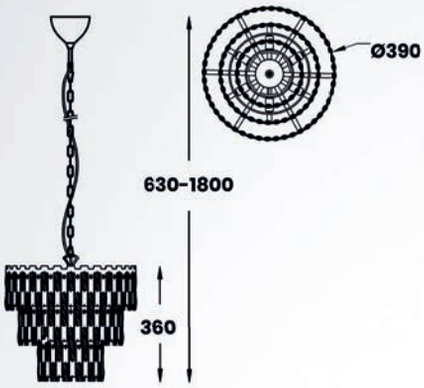

ANZIO
Pendant lamp
P0480-07A-F4AC
7xG9 MAX 28W
metal chrome body, chrome
metal plates, clear crystal glass

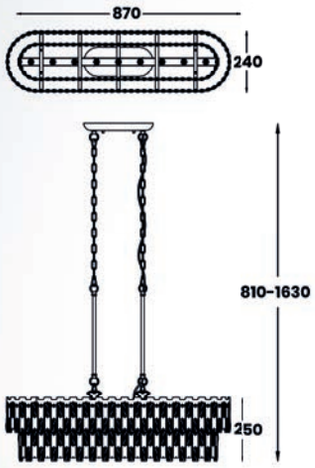

ANZIO
Pendant lamp
P0480-09C-F4AC
9xG9 MAX 8W
metal chrome body, chrome
metal plates, clear crystal glass

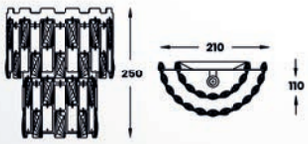

ANZIO
Wall lamp
W0480-02B-B5AC
2xG9 MAX 42W
metal chrome body, chrome
metal plates, clear crystal glass

PRINCE

Ogromna ilość mieniących się kryształków sprawia, że to idealna propozycja do wnętrz w stylu glamour.

A lot of sparkle crystals makes it an ideal choice for glamorous interiors.

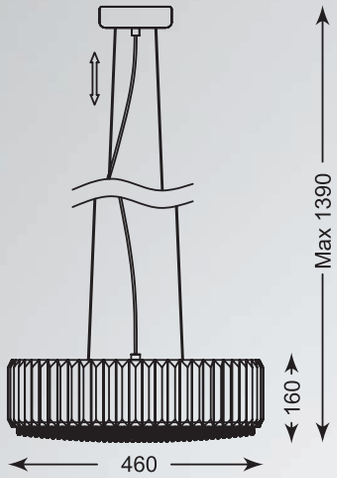

PRINCE
Pendant lamp
P0360-05B-F4AC
5xG9 MAX 42W
clear crystal,
metal chrome canopy

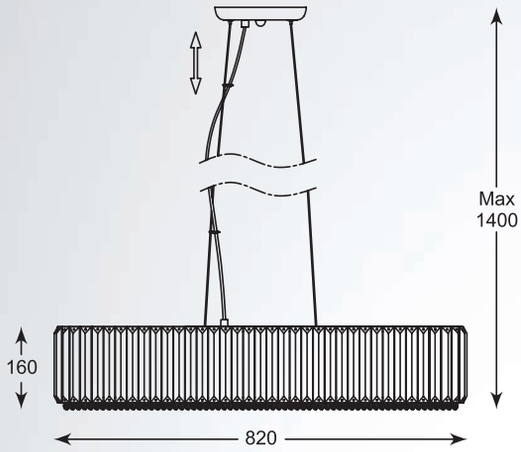

PRINCE
Pendant lamp
P0360-06D-F4AC
6xG9 MAX 42W
clear crystal,
metal chrome canopy

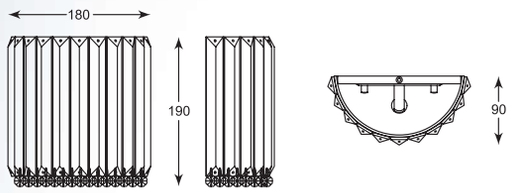

PRINCE
Wall lamp
W0360-01A-B5AC
1xG9 MAX 42W
clear crystal,
metal chrome

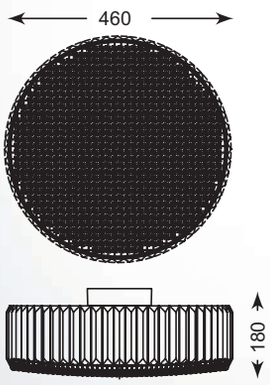

PRINCE
Ceiling lamp
C0360-05B-F4AC
5xG9 MAX 42W
clear crystal,
metal chrome

ANTARCTICA

LAMPA SUFITOWA

Bogato zdobiona konstrukcja składa się ze szklanych, kwadratowych kryształków, które zapewnią wnętrzu luksusowy charakter.

Ceiling lamp. Richly ornamented glass and square crystal construction will give the interior a luxurious character.

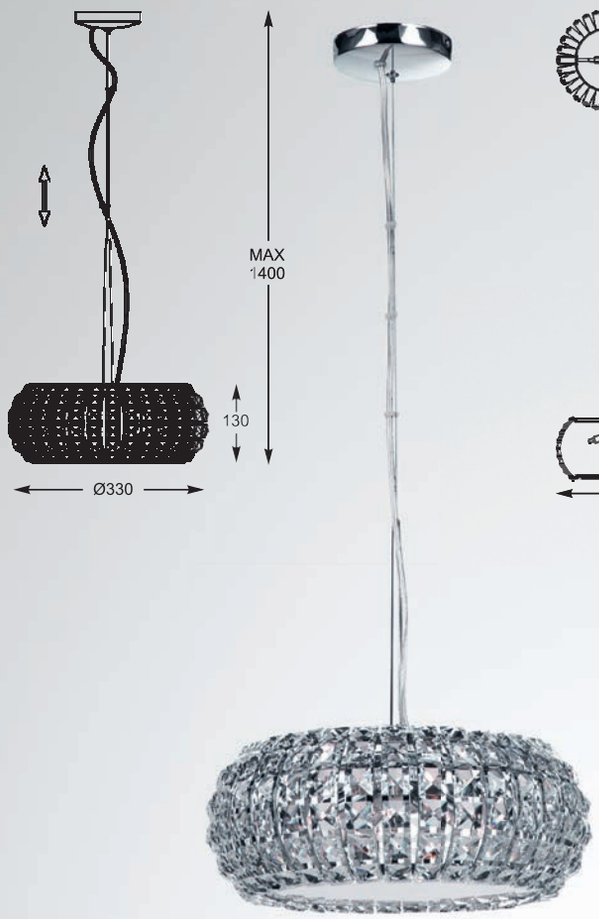

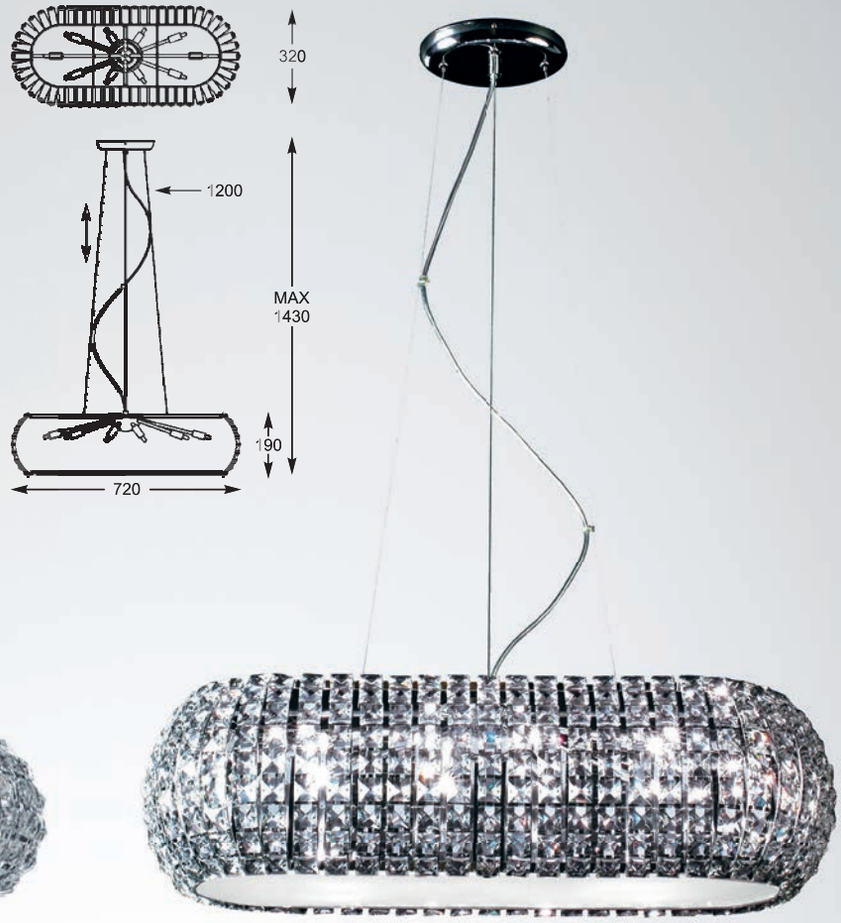

ANTARCTICA
Pendant lamp
P0109-04A-F4AC
4xG9 MAX 42W
K9 clear crystal
metal chrome

ANTARCTICA
Pendant lamp
P0174-10A-F4AC
10xG9 MAX 42W
K9 clear crystal
metal chrome

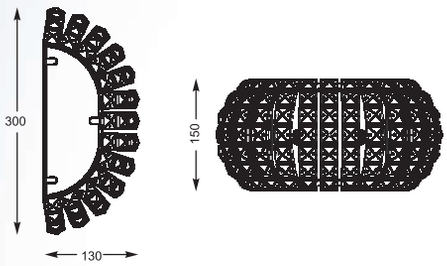

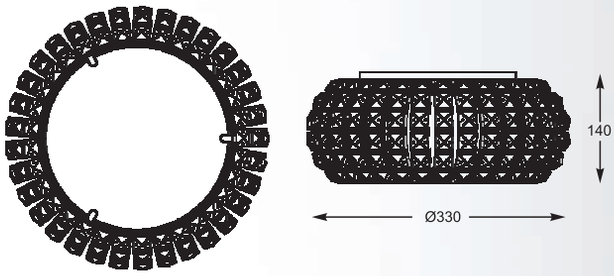

ANTARCTICA
Wall lamp
W0174-02S-F4AC
2xG9 MAX 42W
K9 clear crystal
metal chrome

ANTARCTICA
Ceiling lamp
C0109-04A-F4AC
4xG9 MAX 42W
K9 clear crystal
metal chrome

JASMINE

KINKIET

Wall lamp, W0246-01A-B5AC, 1xG9 MAX 42W
K9 clear crystal, metal chrome

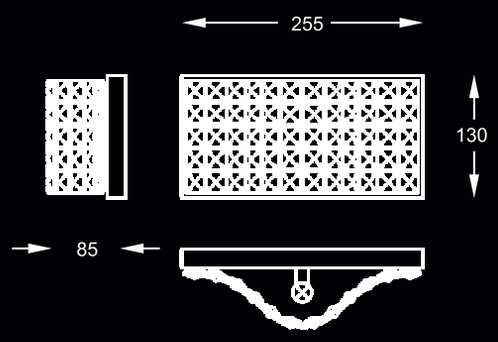

BELLA

KINKIET

Wall lamp, W0066-01A-B5B5, 1xG9 MAX 53W
metal chrome body with crystals inside

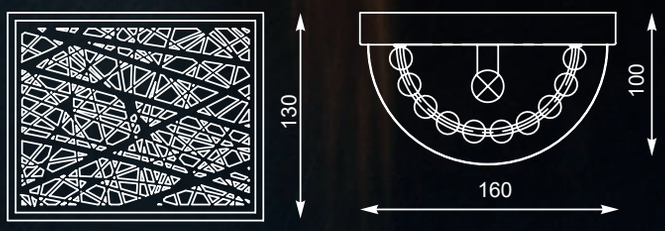

ZUMALINE

CENTAURUS

Rozłożyste konstrukcje w nowoczesnym stylu, które cechuje przede wszystkim bogata ilość zdobień i punktów świetlnych.

Elegant constructions in modern style, which is characterized by a rich decorations and light points.

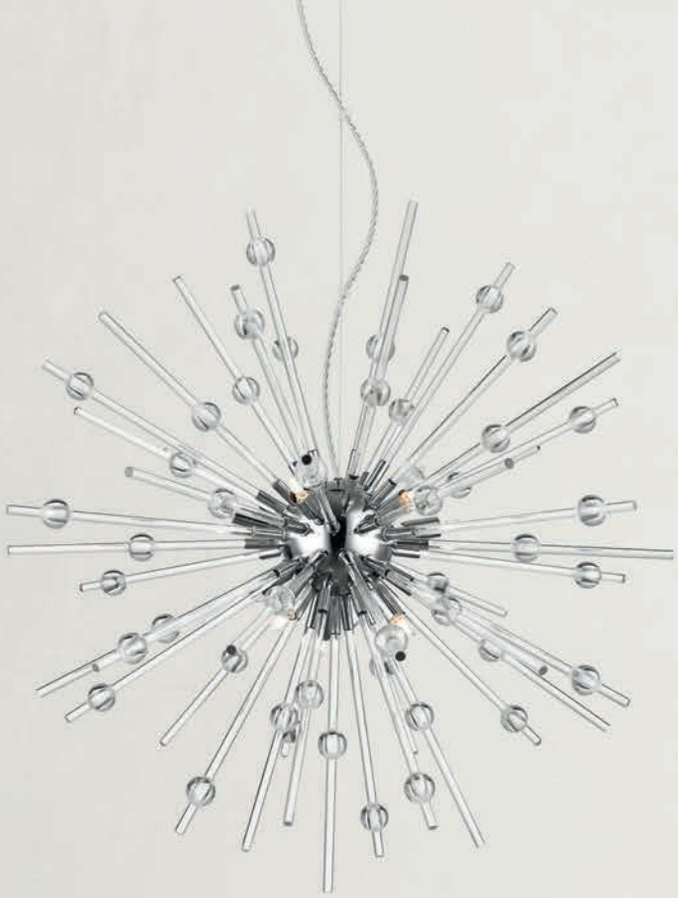

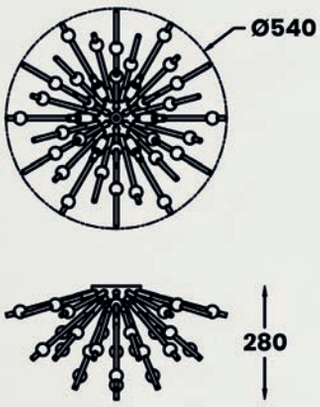

CENTAURUS
Ceiling lamp
C0491-06A-F4AC
6xG9 MAX 42W
metal chrome body,
glass sticks

CENTAURUS
Ceiling lamp
C0491-06A-F7AC
6xG9 MAX 42W
metal gold body,
glass sticks

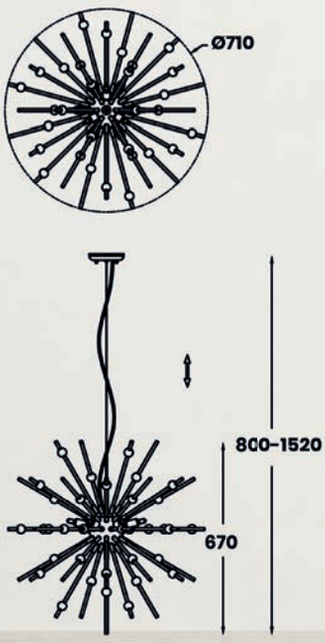

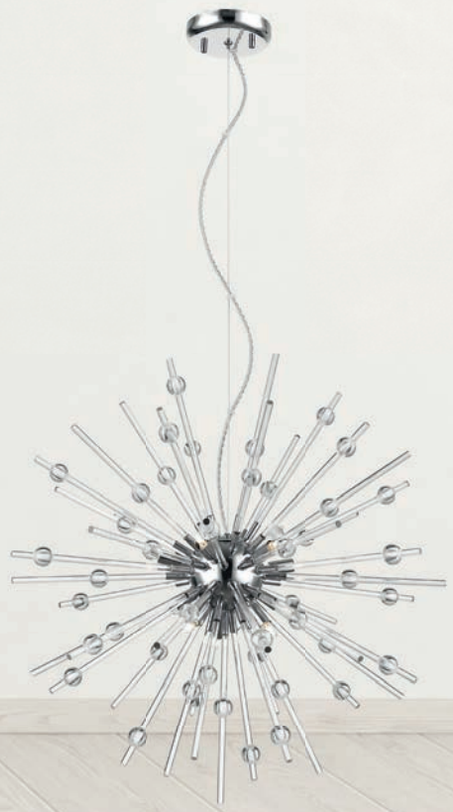

CENTAURUS
Pendant lamp
P0491-09A-F4AC
9xG9 MAX 42W
metal chrome body,
glass sticks

CENTAURUS
Pendant lamp
P0491-09A-F7AC
9xG9 MAX 42W
metal gold body,
glass sticks

GEM

Elegancki przykład oświetlenia centralnego, które swoim wdziękiem uszlachetni takie wnętrza jak salon, jadalnia lub sypialnia.

Elegant model of central lighting, which will gracefully decorate such interiors as living room, dining room or bedroom.

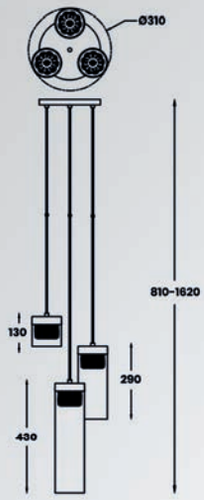

GEM
Pendant lamp
P0389-03D-0FD2
3xG9 MAX 28W
antique bronze metal body,
cognac crystals, transparent
glass shade

GEM
Pendant lamp
P0389-03D-F4AC
3xG9 MAX 28W
metal chrome body, transparent
crystals, transparent glass shade

GEM
Pendant lamp
P0389-03D-F7AC
3xG9 MAX 28W
french gold metal body,
transparent crystals, transparent
glass shade

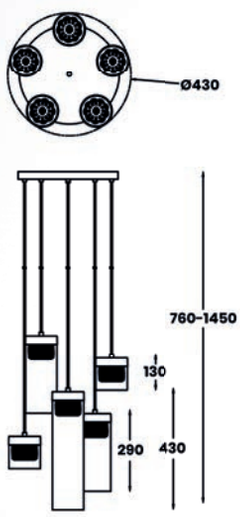

GEM
Pendant lamp
P0389-05D-F4AC
5xG9 MAX 28W
metal chrome body,
transparent crystals,
transparent glass shade

GEM
Pendant lamp
P0389-05D-F7AC
5xG9 MAX 28W
french gold metal body,
transparent crystals, transparent
glass shade

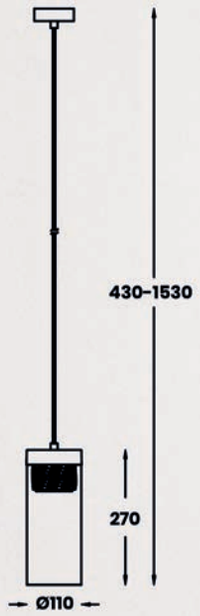
430–1530
270
Ø110

GEM
Pendant lamp
P0389-01D-0FD2
1xG9 MAX 28W
antique bronze metal body, cognak crystals, transparent glass shade

GEM
Pendant lamp
P0389-01D-F4AC
1xG9 MAX 28W
metal chrome body, transparent crystals, transparent glass shade

GEM
Pendant lamp
P0389-01D-F7AC
1xG9 MAX 28W
french gold metal body, transparent crystals, transparent glass shade

GEM
Pendant lamp
P0389-01D-L7AC
1xG9 MAX 28W
antique copper metal body, transparent crystals, transparent glass shade

CRYSTAL

Wytworne rozwiązanie do luksusowych wnętrz.

Stylish solution for luxurious interiors.

CRYSTAL
Pendant lamp
P0076-03E-F4FZ
3xG9 MAX 42W
smoky chrome glass shade
clear crystal drops inside

CRYSTAL
Pendant lamp
P0076-05L-F4FZ
5xG9 MAX 42W
smoky chrome glass shade
clear crystal drops inside

CRYSTAL
Pendant lamp
P0076-06X-F4FZ
6xG9 MAX 42W
smoky chrome glass shade
clear crystal drops inside

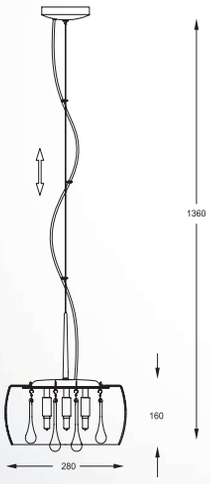

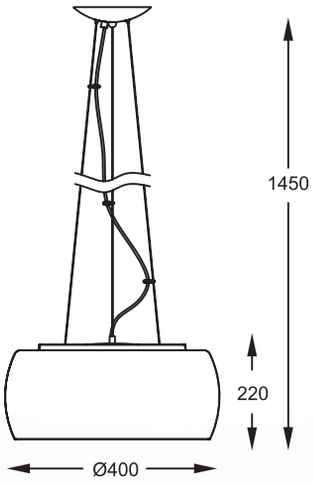

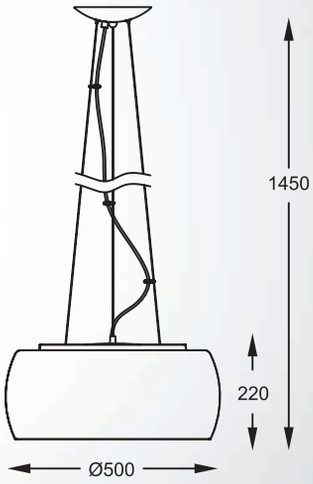

CRYSTAL

Podczas używania klosz staje się przezroczysty, jednak gdy lampa jest zgaszona, możemy zauważyć jego lśniącą powierzchnię.

The lampshade becomes transparent when the lamp is ON, but when the lamp is OFF you can see its shiny surface.

CRYSTAL
Pendant lamp
P0076-03S-F4FZ
3xG9 MAX 42W
smoky chrome glass shade
clear crystal drops inside

CRYSTAL
Pendant lamp
P0076-03R-F4FZ
3xG9 MAX 42W
smoky chrome glass shade
clear crystal drops inside

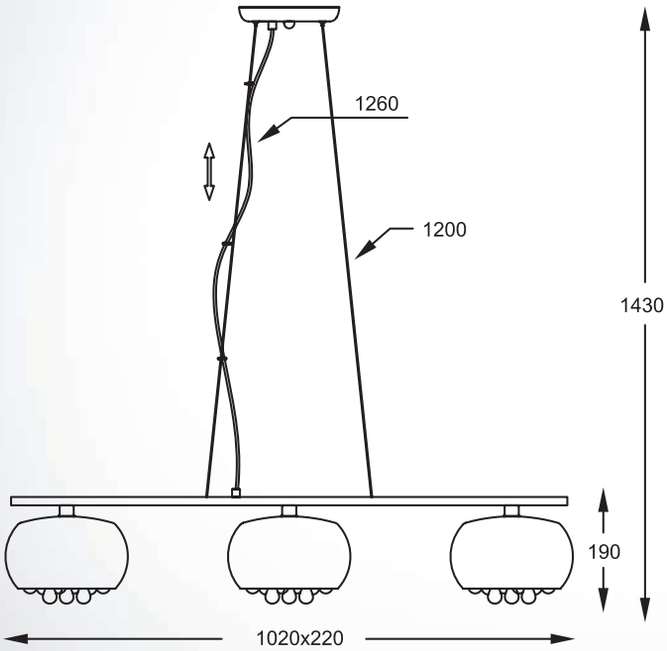

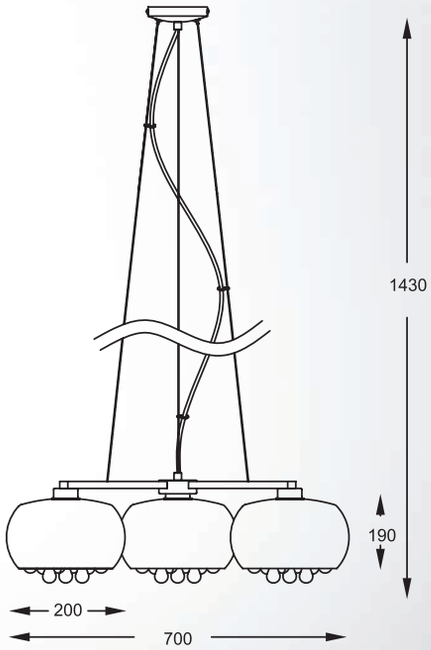

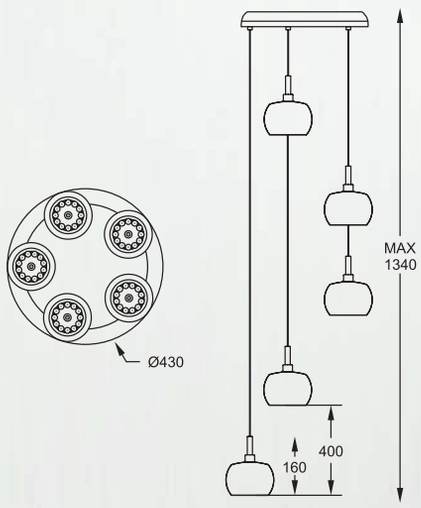

CRYSTAL

Pendant lamp
P0076-05M-B5FZ, 5xG9 MAX 42W
smoky chrome glass shade
clear crystal drops inside

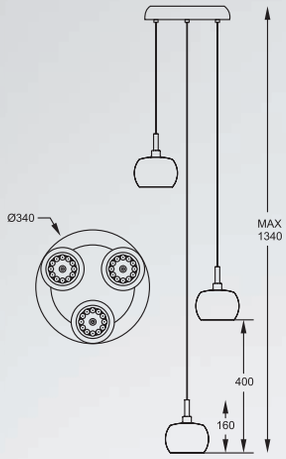

CRYSTAL
Pendant lamp
P0076-03M-B5FZ
3xG9 MAX 42W
smoky chrome glass shade
clear crystal drops inside

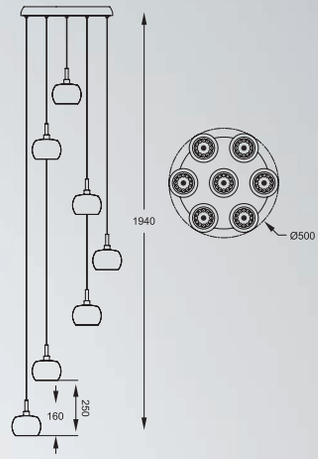

CRYSTAL
Pendant lamp
P0076-07M-B5FZ
7xG9 MAX 42W
smoky chrome glass shade
clear crystal drops inside

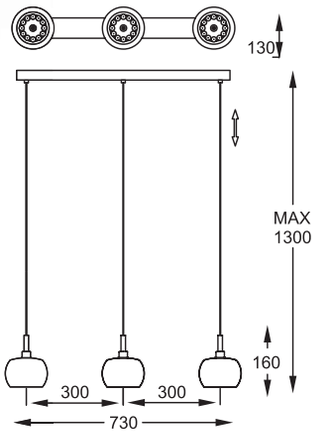

CRYSTAL
Pendant lamp
P0076-03N-B5FZ
3xG9 MAX 42W
smoky chrome glass shade
clear crystal drops inside

CRYSTAL
Pendant lamp
P0076-01A-F4FZ
1xG9 MAX 42W
smoky chrome glass shade
clear crystal drops inside

ZUMALINE

CRYSTAL

Floor lamp
F0076-04A-F4FZ, 4xG9 MAX 42W
smoky chrome glass shade
clear crystal drops inside

CRYSTAL
Ceiling lamp
C0076-05L-F4FZ
5xG9 MAX 42W
smoky chrome glass shade
clear crystal drops inside

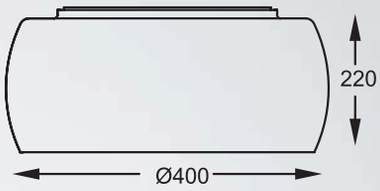

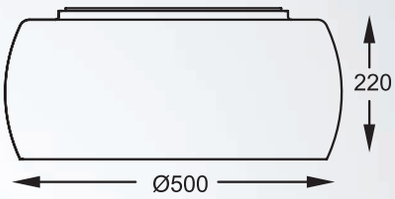

CRYSTAL
Ceiling lamp
C0076-06X-F4FZ
6xG9 MAX 42W
smoky chrome glass shade
clear crystal drops inside

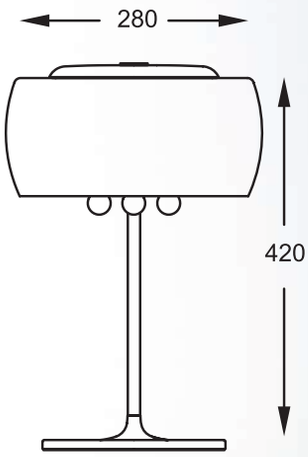

CRYSTAL
Table lamp
T0076-03E-F4FZ
3xG9 MAX 42W
smoky chrome glass shade
clear crystal drops inside

1.

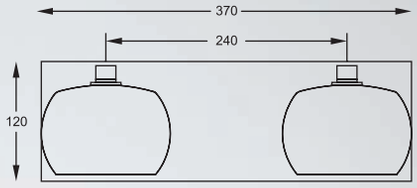

CRYSTAL
Wall lamp
1. W0076-02A-B5FZ
2xG9 MAX 42W
glass plating,
crystal drops,
smoky chrome glass shade

2.

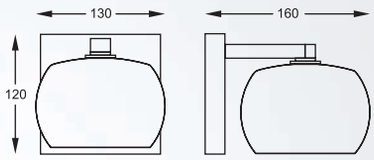

CRYSTAL
Wall lamp
2. W0076-01A-B5FZ
1xG9 MAX 42W
glass plating,
crystal drops,
smoky chrome glass shade

3.

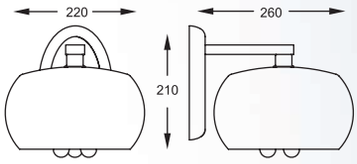

CRYSTAL
Wall lamp
3. W0076-01D-F4FZ
1xG9 MAX 42W
clear glass plating,
clear crystal drops,
smoky chrome glass shade

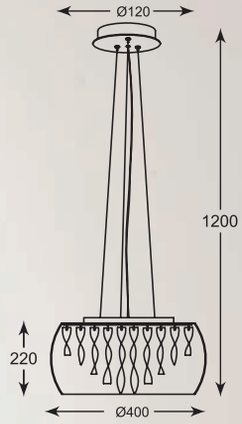

BIAGIO

LAMPA WISZĄCA

Pendant lamp, MD1318-5, 6xG9 MAX 42W metal chrome canopy, transparent glass shade, glass drills inside

ZUMALINE

RAIN

Unikalny design imitujący krople deszczu.

Unique design imitating rain drops.

RAIN

GOLD

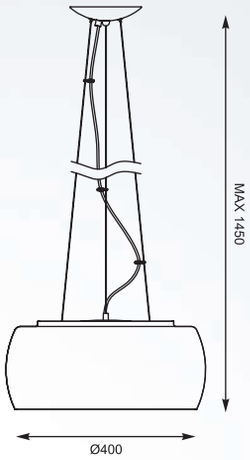

RAIN
Pendant lamp
P0076-05L-F7L9
5xG9 MAX 42W
metal chrome,
gold glass with crystal
drops inside

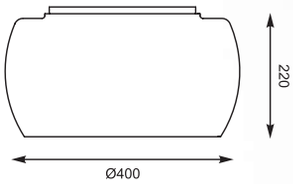

RAIN
Ceiling lamp
C0076-05L-F4L9
5xG9 MAX 42W
metal chrome,
gold glass with crystal
drops inside

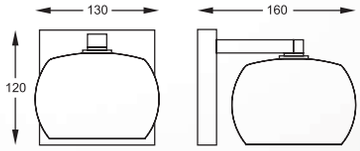

RAIN
Wall lamp
W0076-01A-B5L9
1xG9 MAX 42W
metal chrome,
gold glass with crystal
drops inside

RAIN

SILVER

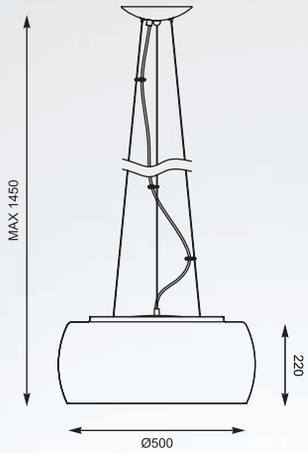

RAIN
Pendant lamp
P0076-06X-F4K9
6xG9 MAX 42W
metal chrome,
smoky glass with
crystal drops inside

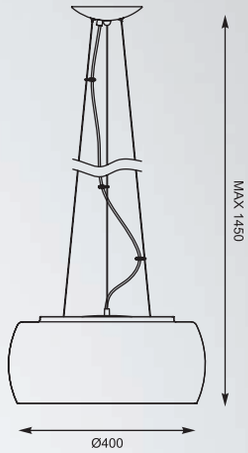

RAIN
Pendant lamp
P0076-05L-F4K9
5xG9 MAX 42W
metal chrome,
smoky glass with
crystal drops inside

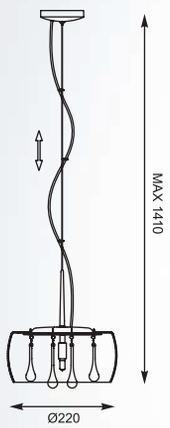

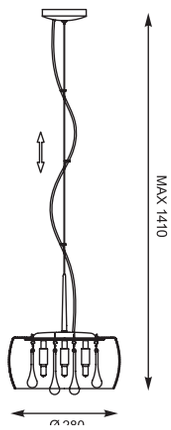

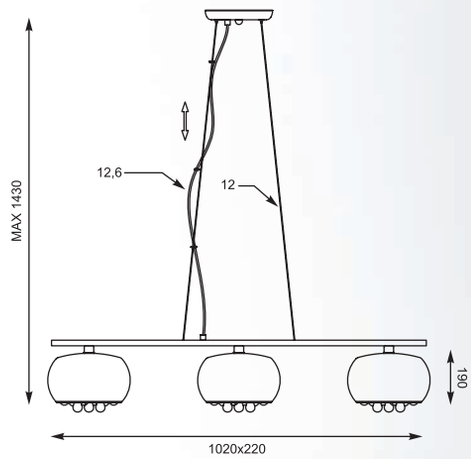

RAIN
Pendant lamp
P0076-01D-F4K9
1xG9 MAX 42W
metal chrome
smoky glass with
crystal drops inside

RAIN
Pendant lamp
P0076-03E-F4K9
3xG9 MAX 42W
metal chrome,
smoky glass with
crystal drops inside

RAIN
Pendant lamp
P0076-03S-F4K9
3xG9 MAX 42W
metal chrome,
smoky glass with
crystal drops inside

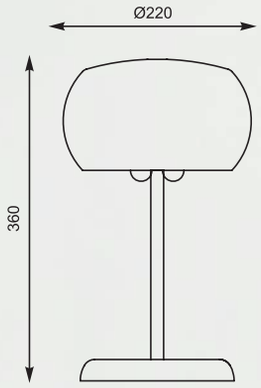

RAIN

Table lamp
T0076-03D-F4K9, 3xG9 MAX 28W
metal chrome, smoky glass with crystal drops inside

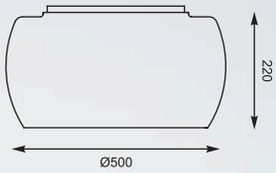

RAIN
Ceiling lamp
C0076-06X-F4K9
6xG9 MAX 42W
metal chrome,
smoky glass with crystal
drops inside

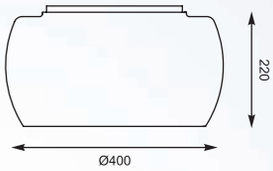

RAIN
Ceiling lamp
C0076-05L-F4K9
5xG9 MAX 42W
metal chrome,
smoky glass with crystal
drops inside

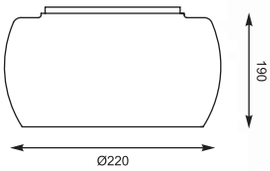

RAIN
Ceiling lamp
C0076-01D-F4K9
1xG9 MAX 42W
metal chrome,
smoky glass with
crystal drops inside

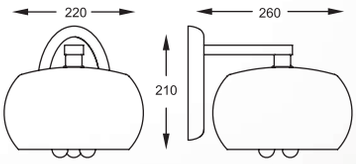

RAIN
Wall lamp
W0076-01D-F4K9
1xG9 MAX 42W
metal chrome,
smoky glass with crystal
drops inside

VISTA

Szlachetna kolorystyka oraz kaskada kryształków.

Pendant lamp. Noble colours and cascade of crystals.

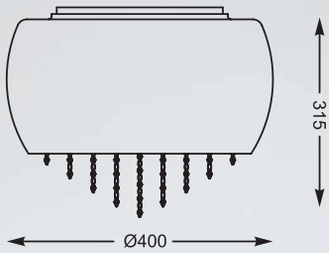

VISTA
Ceiling lamp
C0076-05K-F4GR
5xG9 MAX 42W
silver glass shade with dots,
metal chrome

VISTA
Ceiling lamp
C0076-05K-F4GQ
5xG9 MAX 42W
gold glass shade with dots,
crystal drops inside,
metal chrome

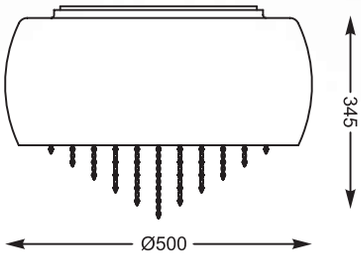

VISTA
Ceiling lamp
C0076-06K-F4GR
6xG9 MAX 42W
silver glass shade with dots,
metal chrome

VISTA
Ceiling lamp
C0076-06K-F4GQ
6xG9 MAX 42W
gold glass shade with dots,
crystal drops inside,
metal chrome

VISTA

Model, który stanie się luksusowym dodatkiem do wnętrza.

A model that is a luxurious addition to the interior.

VISTA
Pendant lamp
P0076-06K-F4GR
6xG9 MAX 42W
silver glass shade with dots,
metal chrome

VISTA
Pendant lamp
P0076-06K-F4GQ
6xG9 MAX 42W
gold glass shade with dots,
crystal drops inside,
metal chrome

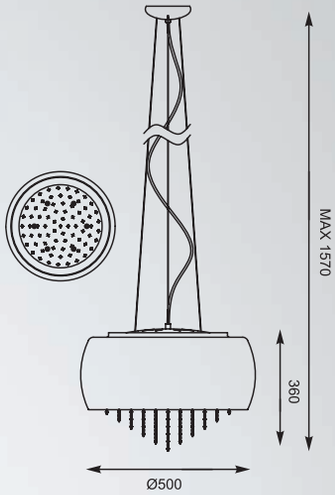

VISTA
Pendant lamp
P0076-05K-F4GR
5xG9 MAX 42W
silver glass shade with dots,
metal chrome

VISTA
Pendant lamp
P0076-05K-F4GQ
5xG9 MAX 42W
gold glass shade with dots,
crystal drops inside,
metal chrome

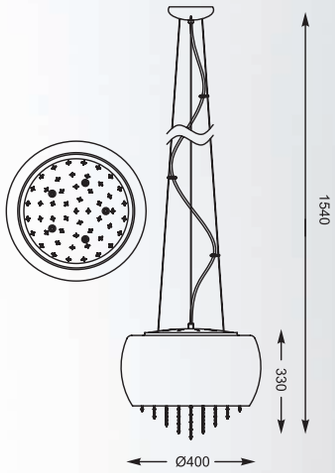

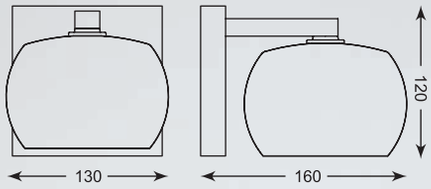

VISTA
Wall lamp
W0076-01B-B5GQ
1xG9 MAX 42W
gold glass shade with dots,
crystal drops inside,
metal chrome

VISTA
Wall lamp
W0076-01B-B5GR
1xG9 MAX 42W
silver glass shade with dots,
crystal drops inside,
metal chrome

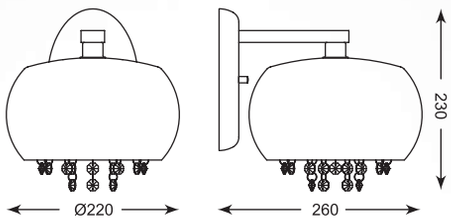

VISTA
Wall lamp
W0076-01E-F4GQ
1xG9 MAX 42W
gold glass shade with dots,
crystal drops inside,
metal chrome

VISTA
Wall lamp
W0076-01E-F4GR
1xG9 MAX 42W
silver glass shade with dots,
crystal drops inside,
metal chrome

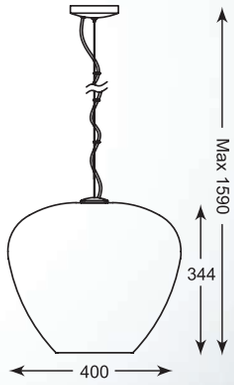

MINAS

LAMPA WISZĄCA

Pendant lamp, P1401-01A-F4FZ, 1xE27 MAX 26W
metal chrome canopy, smoky chrome glass shade

ZUMALINE

PIOLI

Cylindryczne klosze w trzech różnych wzorach o eleganckim wykończeniu będą perfekcyjnym zwieńczeniem aranżacji.

Cylindrical lampshades in three different patterns with an elegant finish will be a perfect culmination of the project.

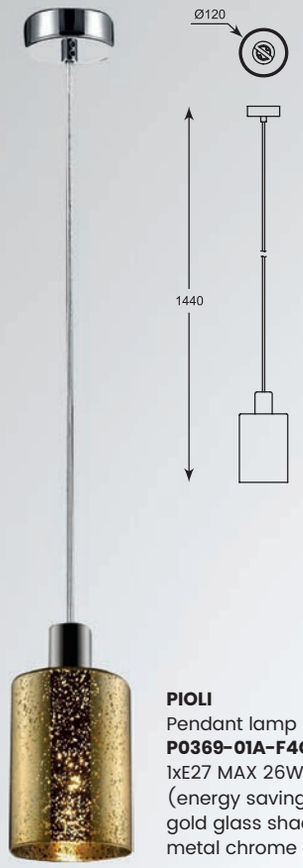

PIOLI
Pendant lamp
P0369-01A-F4GQ
1xE27 MAX 26W
(energy saving bulb only)
gold glass shade with dots,
metal chrome canopy

PIOLI
Pendant lamp
P0369-01A-F4GR
1xE27 MAX 26W
(energy saving bulb only)
silver glass shade with dots,
metal chrome canopy

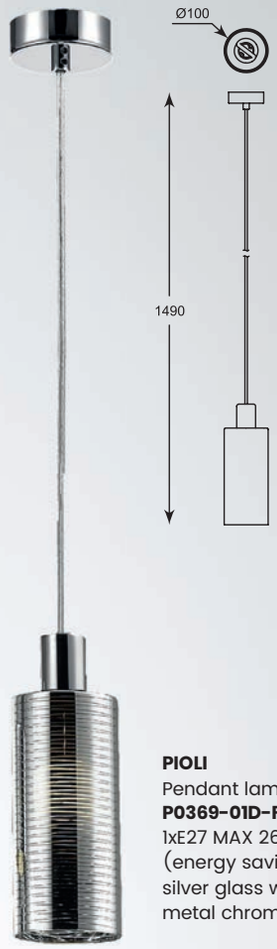

PIOLI
Pendant lamp
P0369-01D-F4GW
1xE27 MAX 26W
(energy saving bulb only)
silver glass with stripes,
metal chrome canopy

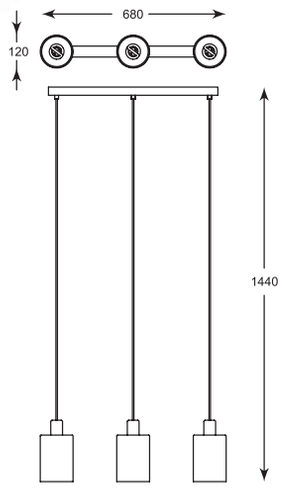

PIOLI
Pendant lamp
P0369-03A-B5GR
3xE27 MAX 26W
(energy saving bulb only)
silver glass shade with dots,
metal chrome canopy

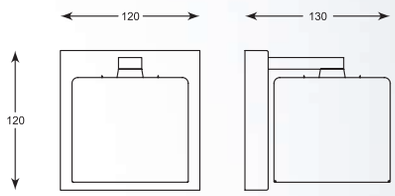

PIOLI
Wall lamp
W0369-01A-B5GR
1xG9 MAX 42W
silver glass shade with dots,
metal chrome canopy

PIOLI
Wall lamp
W0369-01A-B5GW,
1xG9 MAX 42W
silver glass with stripes,
metal chrome canopy

AURELIA

Elegancka forma w połączeniu z nowoczesnym designem nadadzą blasku i zachwycą wymagających odbiorców.

Elegant form in combination with modern design will delight demanding users.

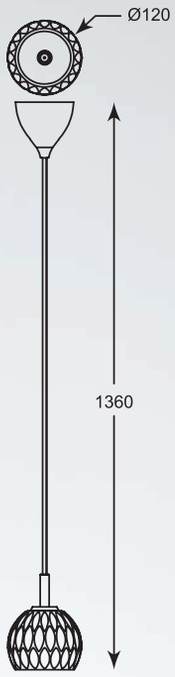

AURELIA
Pendant lamp
P0404-01A-F4AC
1xG9 MAX 42W
clear glass shade
metal chrome canopy

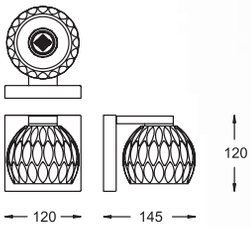

AURELIA
Wall lamp
W0404-01A-B5AC
1xLED 5W 470LM 3000K
clear glass shade
metal chrome body

LED

PERLE

Szklane klosze w kształcie kropli wody wypełnione są drobnymi kryształkami, co nadaje lampie subtelności i szyku.

Raindrop shaped shades are filled with small crystals, which gives the lamp a finesse and chic.

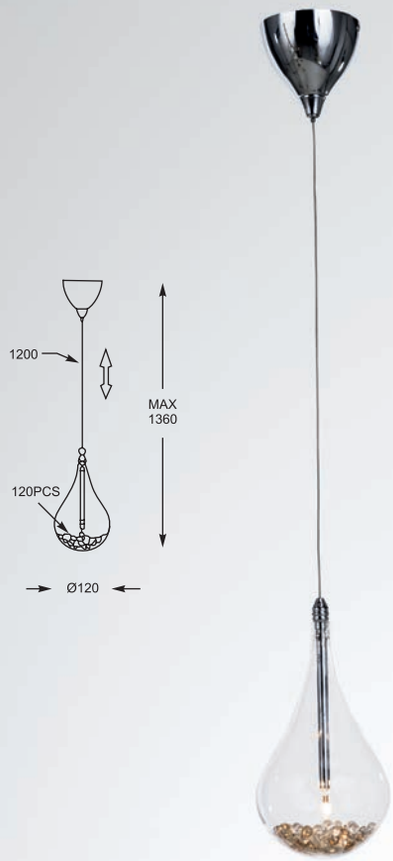

PERLE
Pendant lamp
P0226-01A-F4RK
1xG4 MAX 35W
metal chrome,
clear borosilicate glass with K9 crystal

PERLE
Pendant lamp
P0226-03B-F4RK
3xG4 MAX 35W
metal chrome,
clear borosilicate glass with K9 crystal

PERLE
Wall lamp
W0226-01A-F4RK
1xG4 MAX 35W
metal chrome,
clear borosilicate glass with K9 crystal

PERLE
Pendant lamp
P0226-04H-B5RK
4xG4 MAX 35W
metal chrome,
clear borosilicate glass with K9 crystal

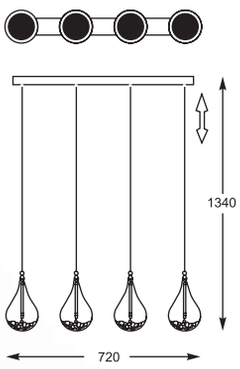

PERLE
Pendant lamp
P0226-05B-F4RK
5xG4 MAX 35W
metal chrome,
clear borosilicate glass with K9 crystal

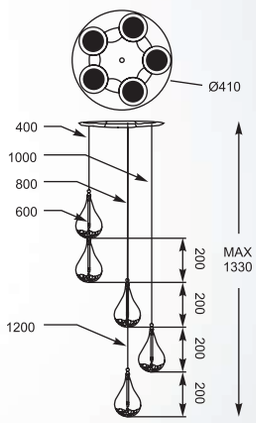

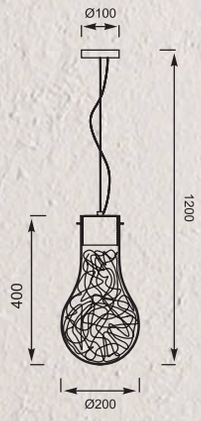

CIRO

LAMPA WISZĄCA

Pendant lamp, MD1458-1L, 1xGU10 MAX 50W
Clear glass with aluminium wire inside

ZUMALINE

ARTEMIDA

LAMPA WISZĄCA

Abażur powleczony delikatnymi, białymi nitkami, skrywa w sobie piękne, zwisające swobodnie kryształy.

Pendant lamp, the shade, coated with a delicate white threads, hides beautiful, freely hanging crystals.

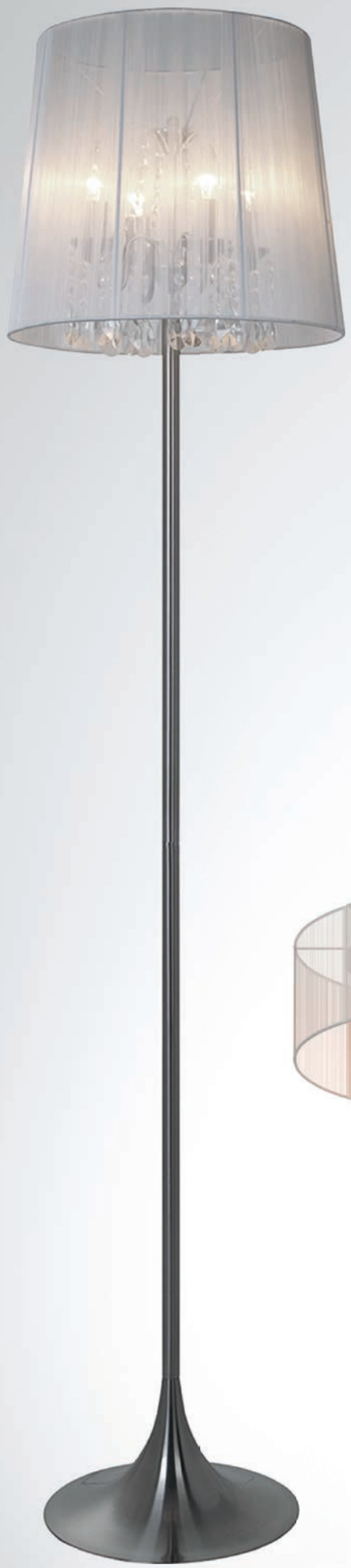

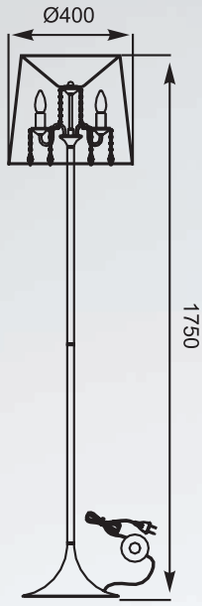

ARTEMIDA
Floor lamp
RLL94123-4
4xE14 MAX 40W
silver metal body
white thread shade
with crystal drops inside

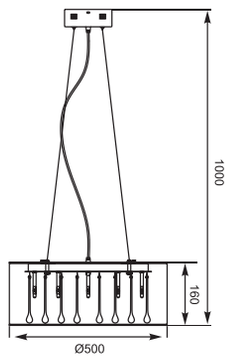

ARTEMIDA
Pendant lamp
RLD92193-6
6xG9 MAX 42W
silver metal canopy
white thread shade
with crystal drops inside

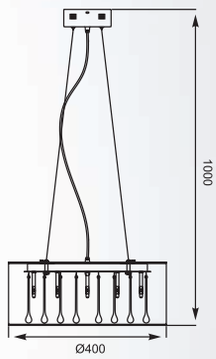

ARTEMIDA
Pendant lamp
RLD92193-5
5xG9 MAX 42W
silver metal canopy
white thread shade
with crystal drops inside

BLINK

Stylowe oraz oryginalne oświetlenie, stanowiące uzupełnienie eleganckich a zarazem nowoczesnych wnętrz.

Stylish and subtle lighting, complementing elegant and modern interiors.

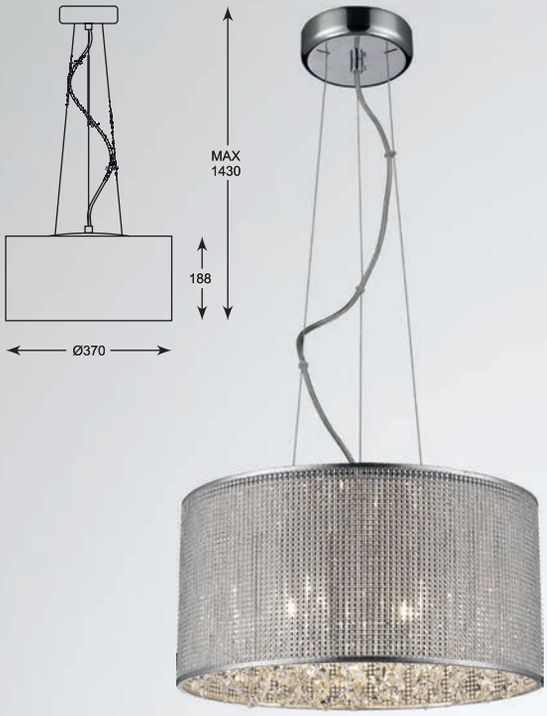

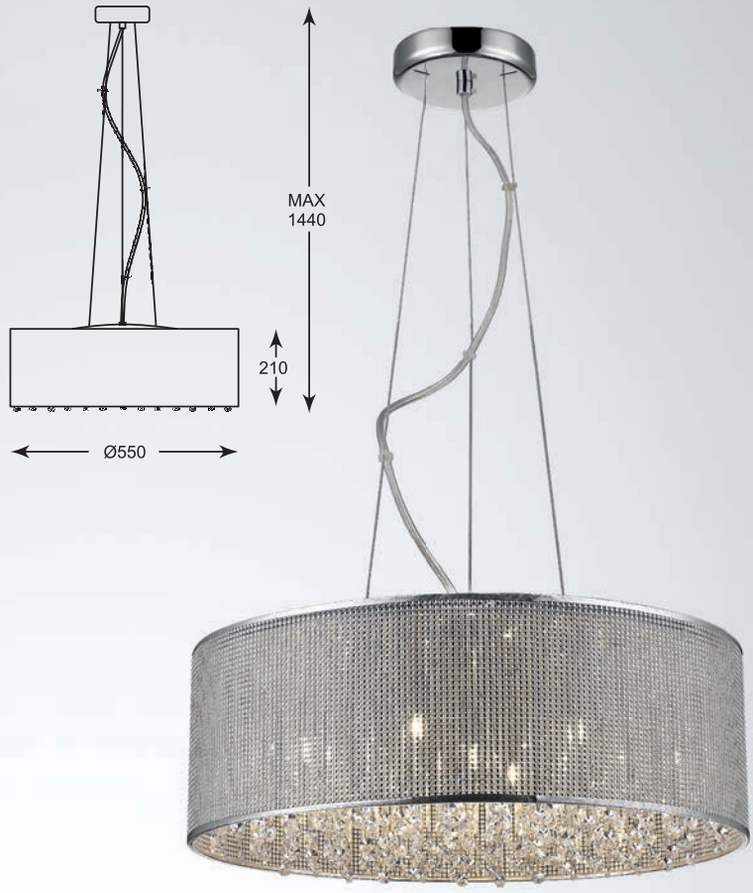

BLINK
Pendant lamp
P0173-05W-F4B3
5xG9 MAX 42W
silver shade,
aluminium rods with small crystals,
metal chrome canopy

BLINK
Pendant lamp
P0173-07W-F4B3
7xG9 MAX 42W
silver shade,
aluminium rods with small crystals,
metal chrome canopy

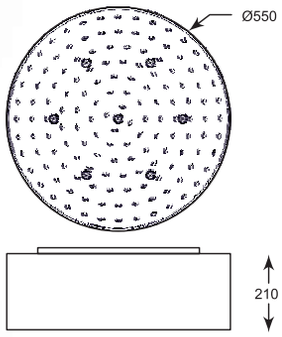

BLINK
Ceiling lamp
C0173-07W-B4B3
7xG9 MAX 42W
silver shade,
aluminium rods with small crystals,
metal chrome canopy

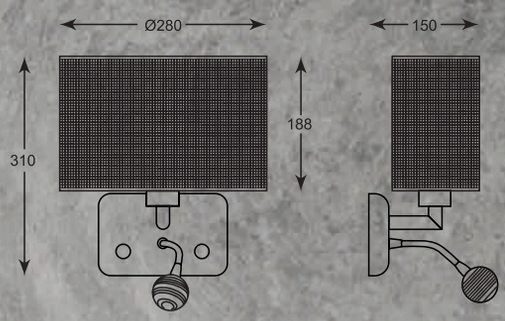

BLINK

Wall lamp, W0173-02A-F4B3, 1xE27 MAX 26W 1xLED 3W 250 LM 3000K
silver shade,
aluminium rods with small crystals,
metal chrome body

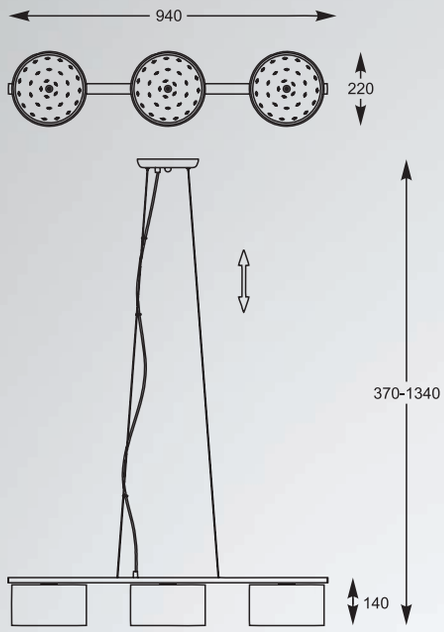

BLINK
Pendant lamp
P0173-03Y-F4B3
3xG9 MAX 42W
silver shade,
aluminium rods with small crystals,
metal chrome body

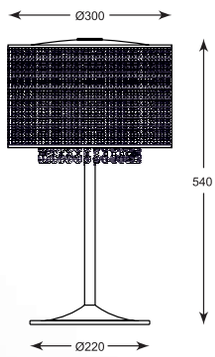

BLINK
Table lamp
T0173-04W-F4B3
4xG9 MAX 42W
silver shade,
aluminium rods with small crystals,
metal chrome body

JEWELLERY

LAMPA WISZĄCA

Intrygujący design uzyskano dzięki niespotykanej fakturze kloszy.

Pendant lamp. This interesting design has been created by unusual texture of the lampshades

JEWELLERY
Pendant lamp
P1550-03A-F4B3
3xE27 MAX 60W
metal chrome base,
metal net shade, glass

JEWELLERY
Pendant lamp
P1550-05A-F4B3
5xE27 MAX 60W
metal chrome base,
metal net shade, glass

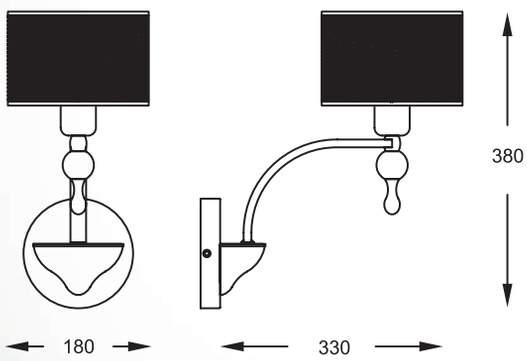

JEWELLERY
Wall lamp
W1550-01A-F4B3
1xE27 MAX 60W
metal chrome base,
metal net shade, glass

ROCK

Szkło pokryte dekoracyjną strukturą nadającą mu oryginalny i artystyczny wygląd przywodzący na myśl rzeźbę wykutą w bryle lodu.

Glass covered with a decorative structure gives the lamp an original and artistic look that brings to mind a sculpture carved in an ice block.

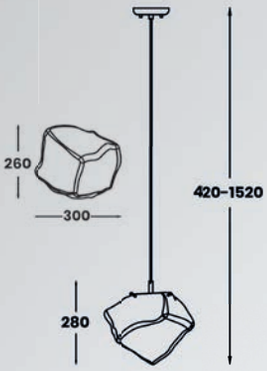

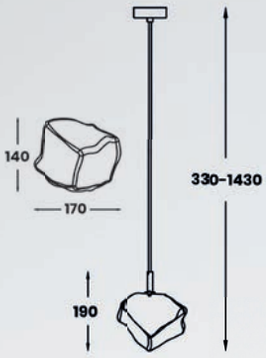

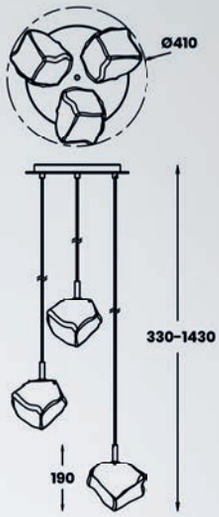

ROCK
Pendant lamp
P0488-01A-F4AC
1xE27 MAX 40W
metal chrome body,
crushed glass shade

ROCK
Pendant lamp
P0488-01F-F4AC
1xG9 MAX 28W
metal chrome body,
crushed glass shade

ROCK
Pendant lamp
P0488-03D-B5AC
3xG9 MAX 28W
metal chrome body,
crushed glass shade

ROCK
Pendant lamp
P0488-01B-U8AC
1xE27 MAX 40W
gold metal body,
crushed glass shade

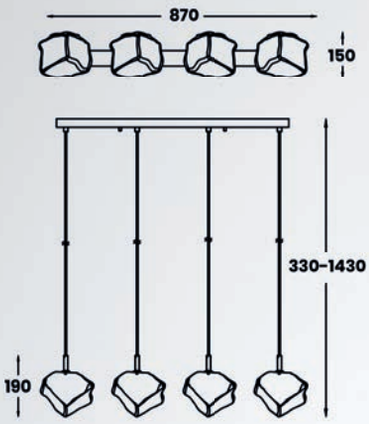

ROCK
Pendant lamp
P0488-04F-B5AC
4xG9 MAX 28W
metal chrome body,
crushed glass shade

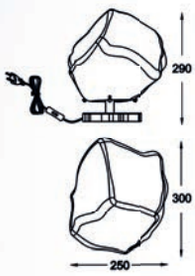

ROCK
Table lamp
T0488-01A-U8AC
1xE27 MAX 40W
gold metal body,
crushed glass shade

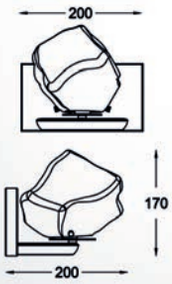

ROCK
Wall lamp
W0488-01A-B5AC
1xG9 MAX 42W
metal chrome body,
crushed glass shade

SILA
Pendant lamp
MD1510-1 (white)
1xG9 MAX 42W
metal chrome canopy,
opal glass shade with
glass ring

SILA
Pendant lamp
MD1510-1 (chrome)
1xG9 MAX 42W
metal chrome canopy,
metal chrome shade
with glass ring

SILA

LAMPA WISZĄCA

Prosta forma, nowoczesność
i elegancki wygląd w jednym, dają
wiele możliwości aranżacyjnych.

Pendant lamp. Simple form, modernity
and elegant appearance. All the above
give a lot of arrangement possibilities.

ZUMALINE

BRESSO

LAMPA WISZĄCA

Niezwykle minimalistyczny i nowoczesny model.
Idealna do salonu, sypialni, jadalni czy przedpokoju.

Pendant lamp. Ultra-modern and minimalistic model.
Perfect to the living room, bedroom, dining room or hallway.

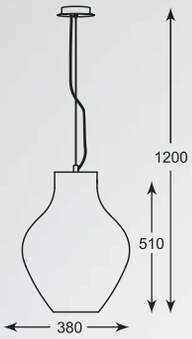

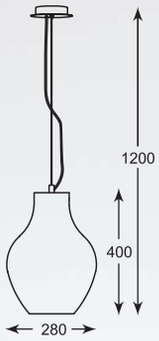

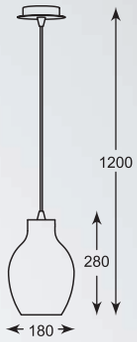

BRESSO
Pendant lamp
OYD-10231A-SP1
1xE27 MAX 60W
metal chrome canopy,
smoky chrome glass shade

BRESSO
Pendant lamp
OYD-10231B-SP1
1xE27 MAX 60W
metal chrome canopy,
smoky chrome glass shade

BRESSO
Pendant lamp
OYD-10231C-SP1
1xE27 MAX 60W
metal chrome canopy,
smoky chrome glass shade

MOON

LAMPA WISZĄCA

Ciekawie wyglądajace klosze stworzone zostały z dymionego szkła o chromowanej zewnętrznej powłoce.

Pendant lamp. The eye-catching lampshades are made of smoky glass with a chrome-plated outer shell.

MOON
Pendant lamp
OYD-10381A-SP1
1xE27 MAX 60W
metal chrome canopy,
smoky chrome glass shade

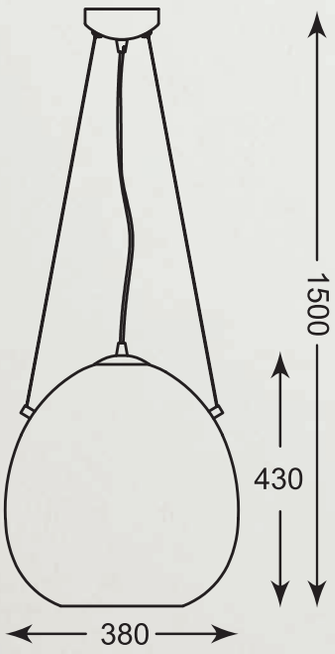

MOON
Pendant lamp
OYD-10381B-SP1
1xE27 MAX 60W
metal chrome canopy,
smoky chrome glass shade

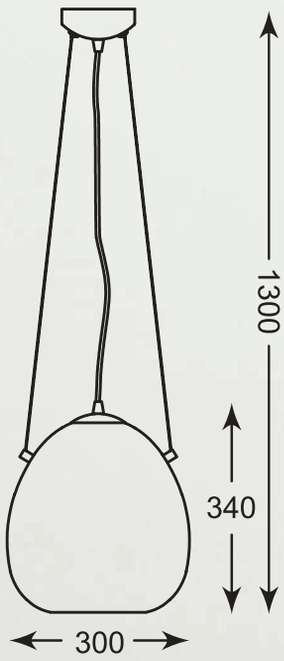

MOON
Pendant lamp
OYD-10381C-SP1
1xE27 MAX 60W
metal chrome canopy,
smoky chrome glass shade

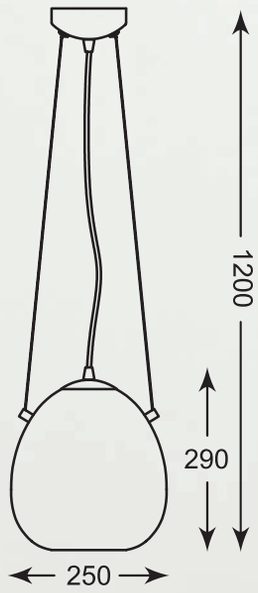

VIDRO

LAMPA WISZĄCA

Lampa przyciąga uwagę swoją minimalistyczną i innowacyjną formą.

Pendant lamp.The lamp attracts attention with its minimalist and innovative form.

VIDRO
Pendant lamp
OYD-10063A-SP1
1xE27 MAX 60W
smokey to clear,
chrome glass, metal

VIDRO
Pendant lamp
OYD-10063B-SP1
1xE27 MAX 60W
smokey to clear,
chrome glass, metal

VIDRO
Pendant lamp
OYD-10063C-SP1
1xE27 MAX 60W
smokey to clear,
chrome glass, metal

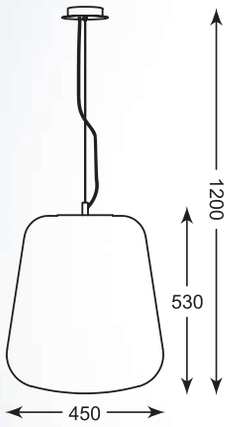

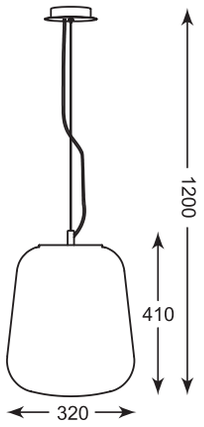

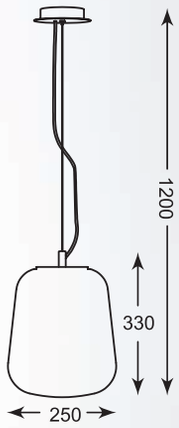

LIBRA

LAMPA WISZĄCA

Minimalistyczny styl oraz zróżnicowana kolorystyka serii daje bezgraniczne możliwości aranżacyjne.

Pendant lamp. Minimalistic style and diversified colours of the series give unlimited possibilities of arrangement.

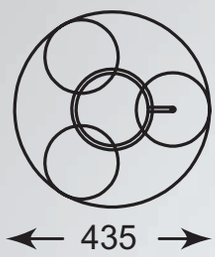

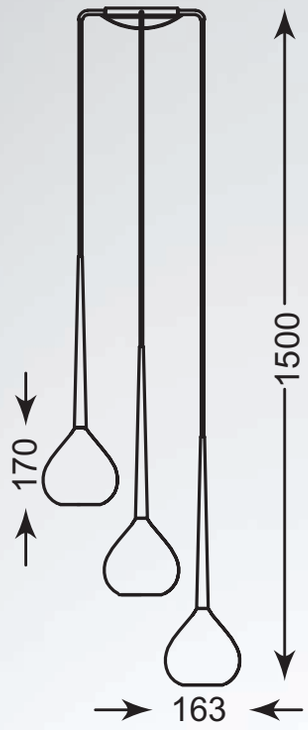

LIBRA
Pendant lamp
MD2128A-3R
3xE14 MAX 40W
metal chrome canopy,
black metal body,
red glass shiny shade

LIBRA
Pendant lamp
MD2128A-3W
3xE14 MAX 40W
metal chrome canopy,
black metal body,
white glass shiny shade

LIBRA
Pendant lamp
MD2128A-3S
3xE14 MAX 40W
metal chrome canopy,
black metal body,
silver glass shiny shade

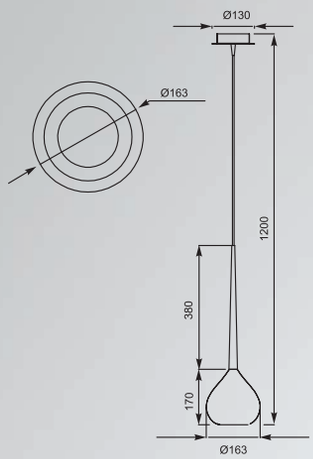

LIBRA
Pendant lamp
MD2128-1R
1xE14 MAX 40W
metal chrome canopy,
black metal body,
red glass shiny shade

LIBRA
Pendant lamp
MD2128-1W
1xE14 MAX 40W
metal chrome canopy,
black metal body,
white glass shiny shade

LIBRA
Pendant lamp
MD2128-1S
1xE14 MAX 40W
metal chrome canopy,
black metal body,
silver glass shiny shade

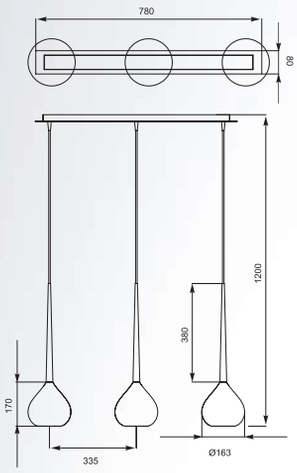

LIBRA
Pendant lamp
MD2128B-3R
3xE14 MAX 40W
metal chrome canopy,
black metal body,
red glass shiny shade

LIBRA
Pendant lamp
MD2128B-3W
3xE14 MAX 40W
metal chrome canopy,
black metal body,
white glass shiny shade

LIBRA
Pendant lamp
MD2128B-3S
3xE14 MAX 40W
metal chrome canopy,
black metal body,
silver glass shiny shade

CHAMPAGNE

LAMPA WISZĄCA

Szklane klosze swoją formą przywodzą na myśl smukłe kieliszki szampana.

Glass lampshades are shaped as slender champagne glasses.

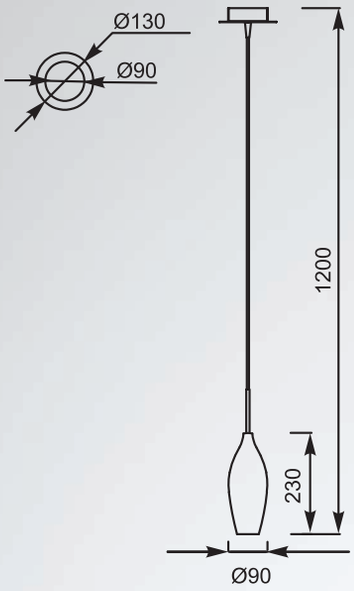

CHAMPAGNE
Pendant lamp
MD2101-1S (silver)
1xE14 MAX 40W
metal chrome canopy,
chrome glass shade

CHAMPAGNE
Pendant lamp
MD2101-1W (white)
1xE14 MAX 40W
metal chrome canopy,
white glass shade

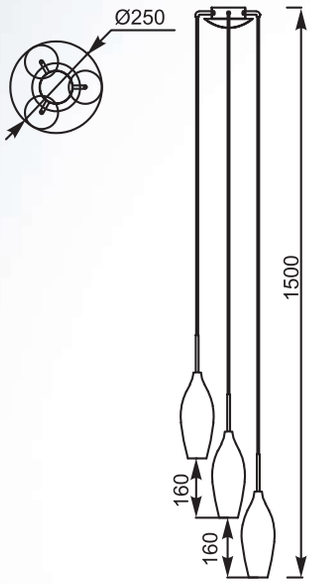

CHAMPAGNE
Pendant lamp
MD2101A-3S (silver)
3xE14 MAX 40W
metal chrome canopy,
chrome glass shade

CHAMPAGNE
Pendant lamp
MD2101A-3W (white)
3xE14 MAX 40W
metal chrome canopy,
white glass shade

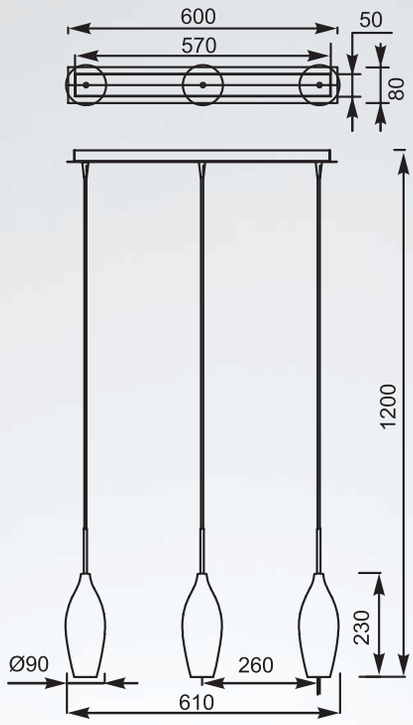

CHAMPAGNE
Pendant lamp
MD2101B-3S (silver)
3xE14 MAX 40W
metal chrome canopy,
chrome glass shade

CHAMPAGNE
Pendant lamp
MD2101B-3W (white)
3xE14 MAX 40W
metal chrome canopy,
white glass shade

VERO

LAMPA WISZĄCA

Prosty a zarazem niebanalny projekt doskonale sprawdzi się w salonie lub sypialni.

Pendant lamp. Simple yet original design will be perfect for living room or bedroom.

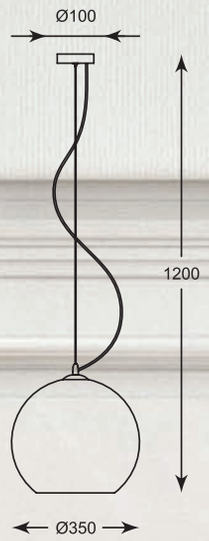

VERO
Pendant lamp
MD1621-1 copper
1xE27 MAX 60W
copper glass with
copper canopy

VERO
Pendant lamp
MD1621-1 chrome
1xE27 MAX 60W
chrome glass with
chrome canopy

ZUMALINE

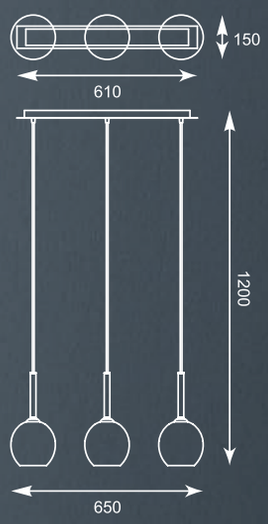

MONIC

LAMPA WISZĄCA

Kuliste szklane klosze w eleganckiej kolorystyce zostały przyozdobione chromowanymi elementami, dzięki czemu lampy są subtelną ozdobą pomieszczenia.

Pendant lamp. Spherical glass lampshades in elegant colours have been decorated with chrome elements, which makes the lamps a subtle decoration of the room.

MONIC
Pendant lamp
MD1629-1 Chrome
1xE14 MAX 40W
smoky chrome glass
with chrome canopy

MONIC
Pendant lamp
MD1629-1 White
1xE14 MAX 40W
white glass with
chrome canopy

MONIC
Pendant lamp
MD1629-1 Copper
1xE14 MAX 40W
copper glass
with chrome canopy

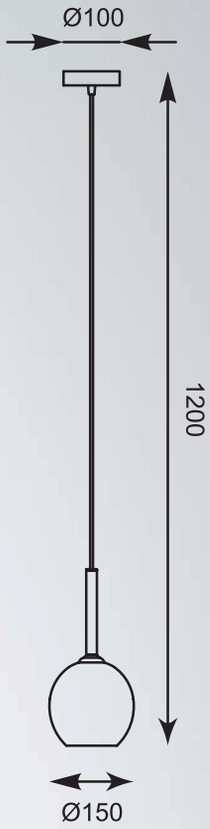

MONIC
Pendant lamp
MD1629-3A Copper
3xE14 MAX 40W
copper glass with
chrome canopy

MONIC
Pendant lamp
MD1629-3A Chrome
3xE14 MAX 40W
smoky chrome glass
with chrome canopy

ZUMALINE

MONIC
Pendant lamp
MD1629-3B Chrome
3xE14 MAX 40W
smoky chrome glass
with chrome canopy

MONIC
Pendant lamp
MD1629-3B Copper
3xE14 MAX 40W
copper glass with
chrome canopy

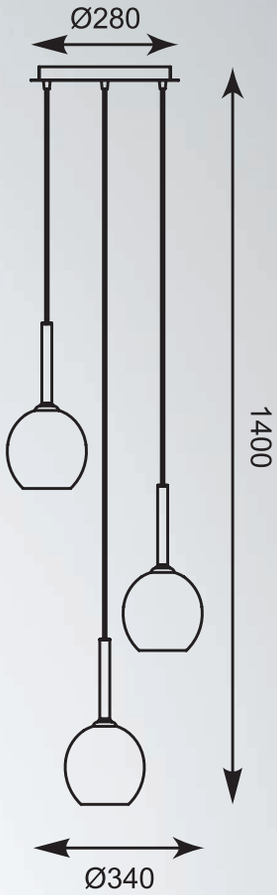

MONIC
Pendant lamp
MD1629-5B Chrome
5xE14 MAX 40W
smoky chrome glass
with chrome canopy

MONIC
Pendant lamp
MD1629-5B Copper
5xE14 MAX 40W
copper glass with
chrome canopy

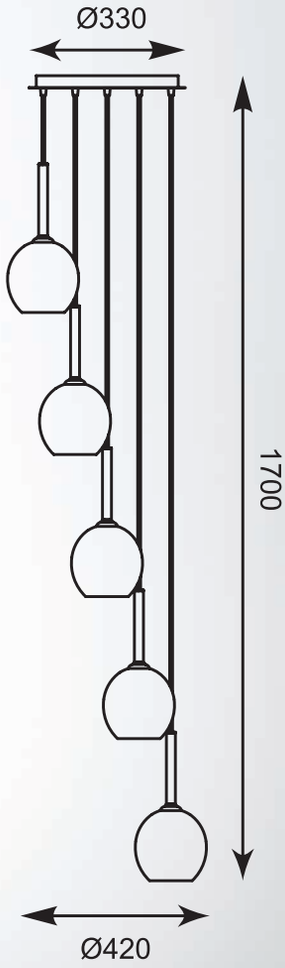

ZUMALINE

BERO

LAMPA WISZĄCA

Wytworny klosz o ciekawym wzorze w połączeniu z tradycyjnym kształtem nada szyku wnętrzom w różnym stylu.

A stylish lamp shade with an interesting design combined with a traditional shape will give the interior chic in various styles.

BERO
Pendant lamp
DC-6042B
1xE27 MAX 60W
metal chrome canopy,
white cracked glass

BERO
Pendant lamp
DC-6042C
1xE27 MAX 60W
metal chrome canopy,
white cracked glass

BERO
Pendant lamp
DC-6042D
1xE27 MAX 60W
metal chrome canopy,
white cracked glass

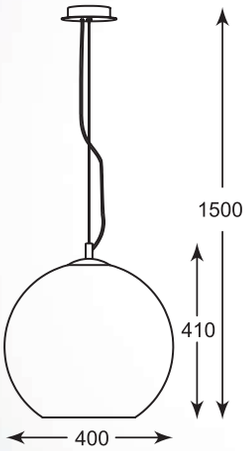

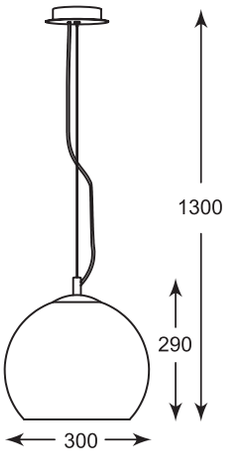

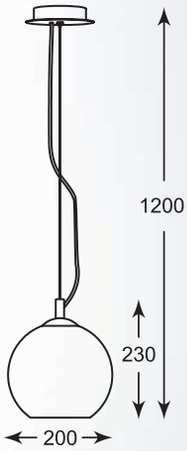

MUSCA

LAMPA WISZĄCA

Pendant lamp, MD2129-1W, 1xE14 MAX 40W
Metal chrome body and canopy, shiny white glass shade

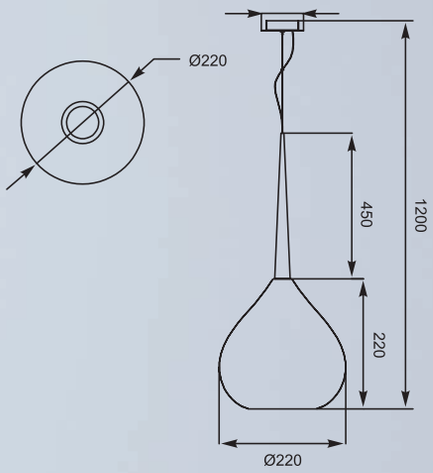

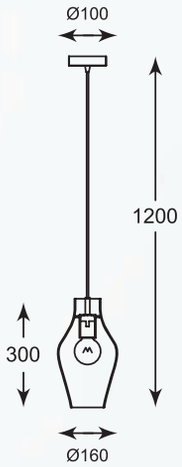

GOBLET

LAMPA WISZĄCA

Pendant lamp, MD1633-1 Clear, 1xE27 MAX 60W
Metal chrome canopy, transparent glass shade

ZUMA LINE

NAOMI

Lśniący biały klosz ze szkła w kształcie łezki to świetny element dekoracyjny do wnętrz różnego typu.

Glossy white glass shade in the shape of a teardrop is a great decorative element for various types of interiors.

NAOMI
Pendant lamp
P1305-03S-B5AB
3xE27 MAX 60W
metal chrome canopy
shiny white glass shade

NAOMI
Pendant lamp
P1305-01S-F4AB
1xE27 MAX 60W
metal chrome canopy
shiny white glass shade

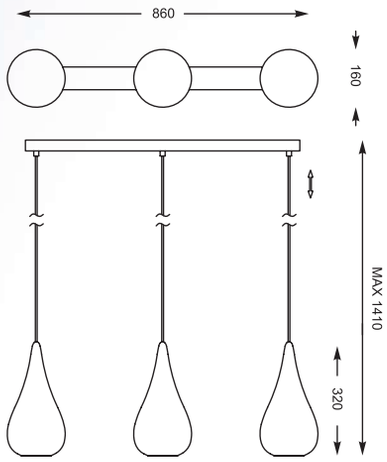

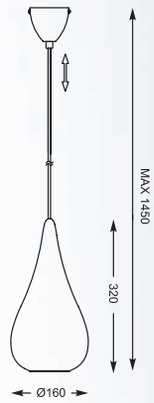

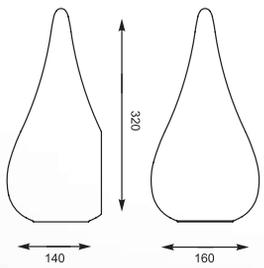

NAOMI
Wall lamp
W1305-01S-A0AB
1xG9 MAX 42W
shiny white glass shade

RIANO

Nietypowy projekt o efektownym i niespotykanym kształcie.

Unusual project of fancy and unusual shape.

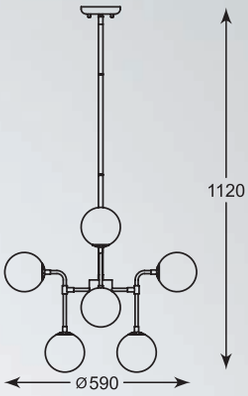

RIANO
Pendant lamp
P0454-08C-SDGF
8xG9 MAX 42W
gold and black metal,
opal and clear glass

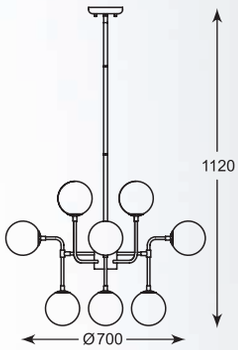

RIANO
Pendant lamp
P0454-12C-SDGF
12xG9 MAX 42W
gold and black metal,
opal and clear glass

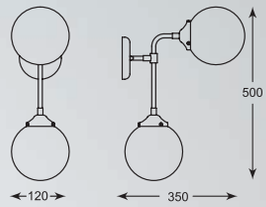

RIANO
Wall lamp
W0454-02D-SDAC
2xE27 MAX 40W
gold and black metal,
clear glas

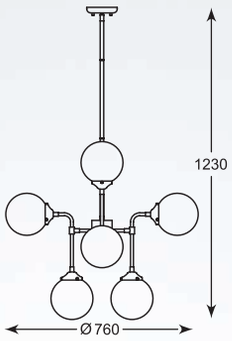

RIANO
Pendant lamp
P0454-08D-SDAC
8xE27 MAX 40W
gold and black metal,
clear glass

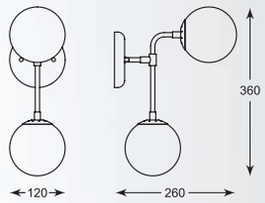

RIANO
Wall lamp
W0454-02A-SDAA
2xG9 MAX 42W
gold and black metal
opal glass

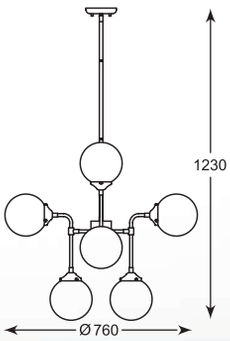

RIANO
Pendant lamp
P0454-08D-SDAA
8xE27 MAX 40W
gold and black metal,
opal glass

RAME

LAMPA WISZĄCA

Znakomite rozwiązanie do wnętrz utrzymanych w stylu nowoczesnym lub minimalistycznym.

Pendant lamp. Excellent solution for interiors maintained in a modern or minimalist style.

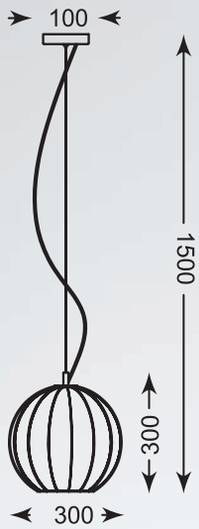

RAME
Pendant lamp
OYD-10298B-SP1
1xE27 MAX 60W
clear glass shade,
metal antique brass canopy

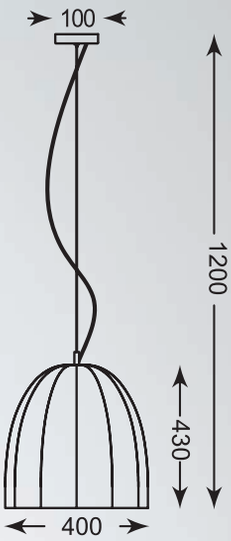

RAME
Pendant lamp
OYD-10300A-SP1
1xE27 MAX 60W
metal antique brass canopy

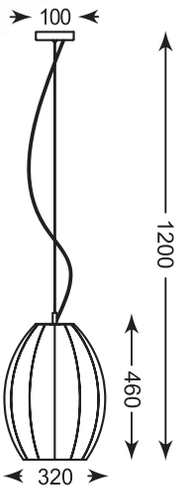

RAME
Pendant lamp
OYD-10327A-SP1
1xE27 MAX 60W
clear glass shade,
metal antique brass canopy

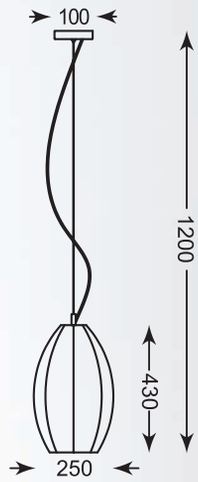

RAME
Pendant lamp
OYD-10327B-SP1
1xE27 MAX 60W
clear glass shade,
metal antique brass canopy

DONATO

LAMPA WISZĄCA

Przykuwa uwagę swoją innowacyjnością
i pomysłem wykonania.
Niezwykłe połączenie do nowoczesnych
oraz industrialnych pomieszczeń.

Pendant lamp. It attracts attention with its
innovation and design.Unusual combination
for modern and industrial rooms.

DONATO
Pendant lamp
P0310-03H-B5GP
3xE27 MAX 60W
metal chrome canopy
glass shade with copper
metal inside

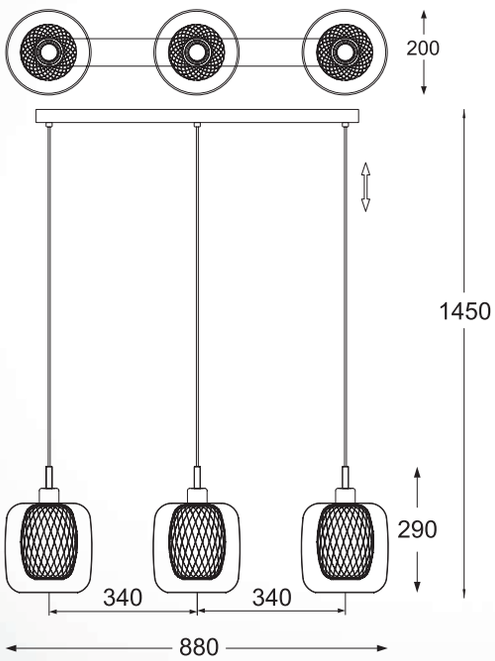

DONATO
Pendant lamp
P0310-01H-F4GP
1xE27 MAX 60W
metal chrome canopy,
glass shade with copper
metal inside

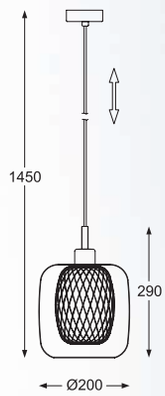

CHANDELIER

Na interesującą formę wykonania składają się szklane elementy dekoracyjne, tekstylne abażury i chromowane wykończenia.

An interesting form of workmanship consists of glass decorative elements, textile lampshades and chrome finishes.

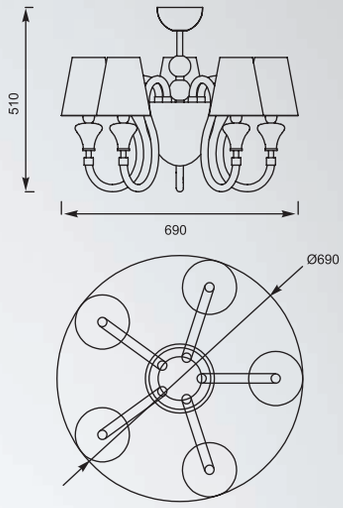

CHANDELIER
Ceiling lamp
MC2070-5BL
5xE14 MAX 25W/1xG9 MAX 40W
white glass on body and black glass arms,
black shade, metal chrome

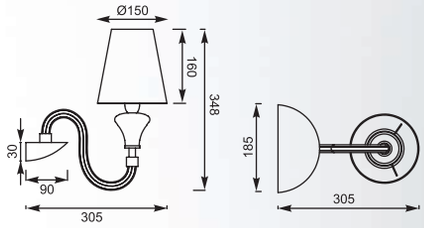

CHANDELIER
Wall lamp
MB2070-1BL
1xE14 MAX 25W
white glass on body and black glass arms,
black shade, metal chrome

WIRE

LAMPA WISZĄCA

Aluminiowa czasza w formie klatki to trafny wybór dla osób, które lubią styl industrialny.

Pendant lamp.The aluminium frame in the form of a cage is the right choice for those people who like industrial style.

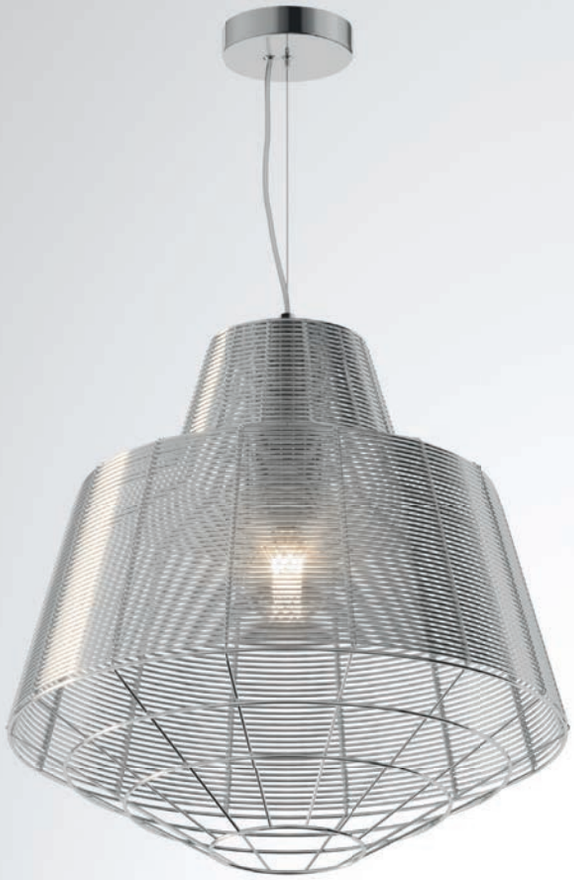

WIRE
Pendant lamp
MD1712-1L-Silver
1xE27 MAX 60W
silver aluminium wire shade,
metal chrome canopy

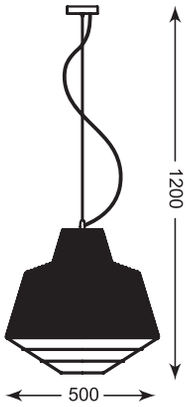

WIRE
Pendant lamp
MD1712-1L-Black
1xE27 MAX 60W
black metal canopy,
black aluminium wire shade

WIRE
Pendant lamp,
MD1712-1A-Silver
1xE27 MAX 60W
silver aluminium wire shade,
metal chrome canopy

WIRE
Pendant lamp
MD1712-1A-Black
1xE27 MAX 60W
black metal canopy,
back aluminium wire shade

WIRE
Pendant lamp
MD1712-1B-Silver
1xE27 MAX 60W
silver aluminium wire shade,
metal chrome canopy

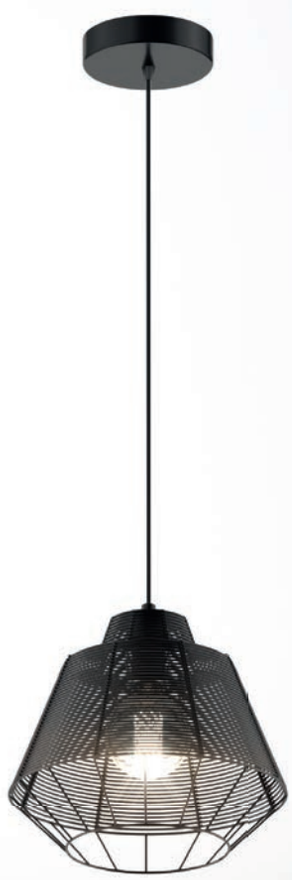

WIRE
Pendant lamp
MD1712-1B-Black
1xE27 MAX 60W
black metal canopy,
black aluminium wire shade

TANGO

Połączenie szkła, metalu i aluminium tworzy spójną całość w nowoczesnym stylu.

The combination of glass, metal and aluminium creates a complete unit in a modern style.

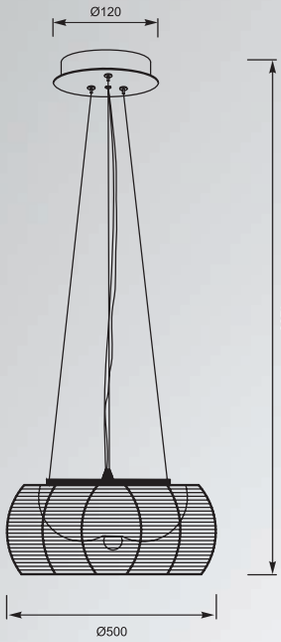

TANGO
Pendant lamp
MD1104-2L (black)
2xE27 MAX 60W
black aluminium wire shade,
opal glass inside

TANGO
Pendant lamp
MD1104-2L (silver)
2xE27 MAX 60W
silver aluminium wire shade,
opal glass inside

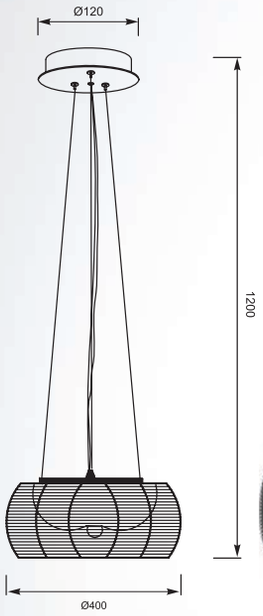

TANGO
Pendant lamp
MD1104-2 (black)
2xE27 MAX 60W
black aluminium wire shade,
opal glass inside

TANGO
Pendant lamp
MD1104-2 (silver)
2xE27 MAX 60W
silver aluminium wire shade,
opal glass inside

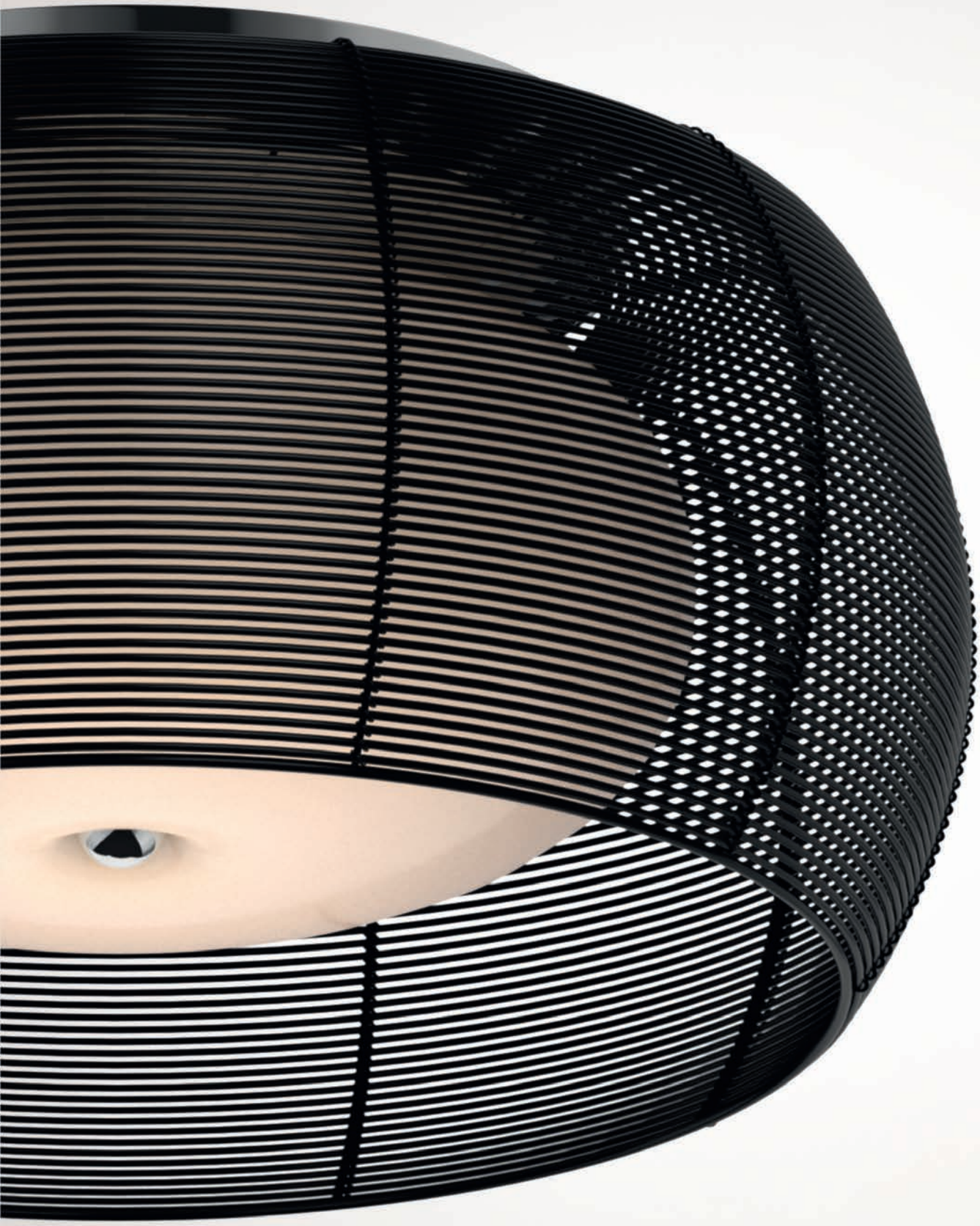

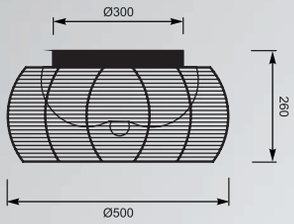

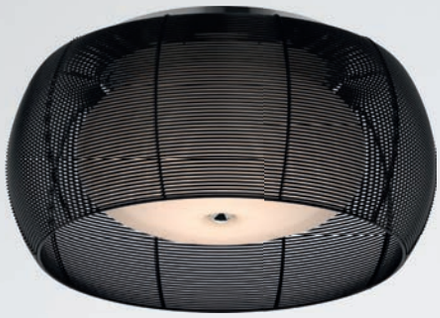

TANGO
Ceiling lamp
MX1104-2L (black)
2xE27 MAX 60W
black aluminium wire shade,
opal glass inside

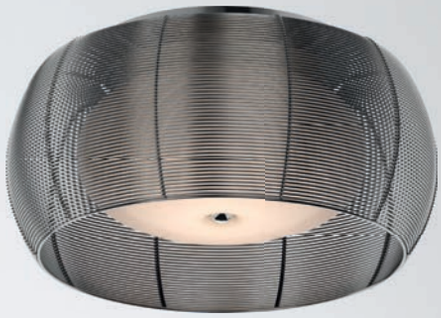

TANGO
Ceiling lamp
MX1104-2L (silver)
2xE27 MAX 60W
silver aluminium wire shade,
opal glass inside

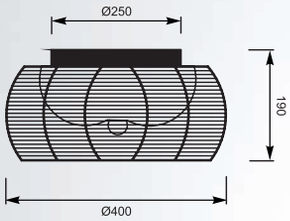

TANGO
Ceiling lamp
MX1104-2 (black)
2xE27 MAX 60W
black aluminium wire shade,
opal glass inside

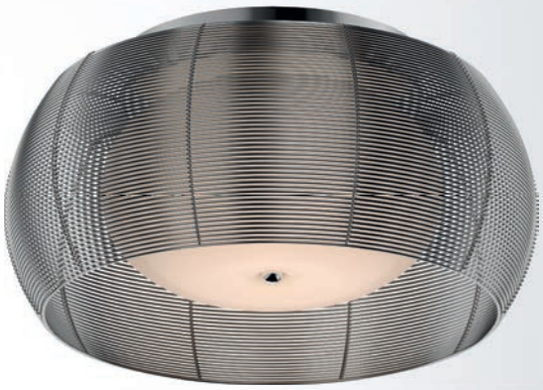

TANGO
Ceiling lamp
MX1104-2 (silver)
2xE27 MAX 60W
silver aluminium wire shade,
opal glass inside

PICO

Interesujący wygląd i stonowana kolorystyka.

Interesting appearance and subdued colours.

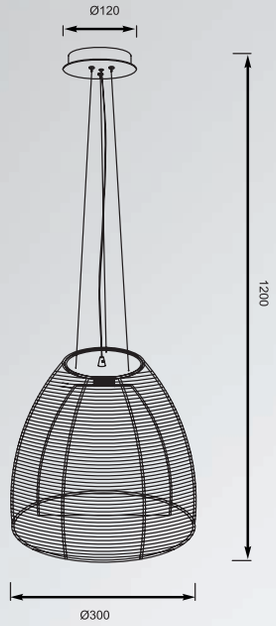

PICO
Pendant lamp
MD9023-1L (Black)
1xE27 MAX 60W
black aluminium wire shade
with shade opal glass inside

PICO
Pendant lamp
MD9023-1L (Silver)
1xE27 MAX 60W
silver aluminium wire shade
with shade opal glass inside

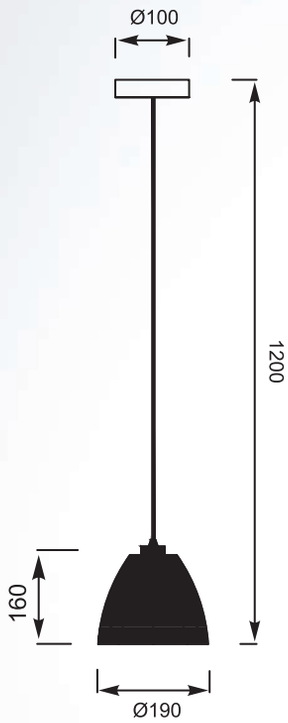

PICO
Pendant lamp
MD9023-1S (Black)
1xE27 MAX 60W
black aluminium wire shade
with shade opal glass inside

PICO
Pendant lamp
MD9023-1S (Silver)
1xE27 MAX 60W
silver aluminium wire shade
with shade opal glass inside

PICO

LAMPA WISZĄCA

Intrygujący dwuczęściowy klosz złożony został z opalowego szkła oraz okalającej go aluminiowej konstrukcji.

Pendant lamp. Intersting two-part lamp shade is composed of opal glass and aluminium construction surrounding it.

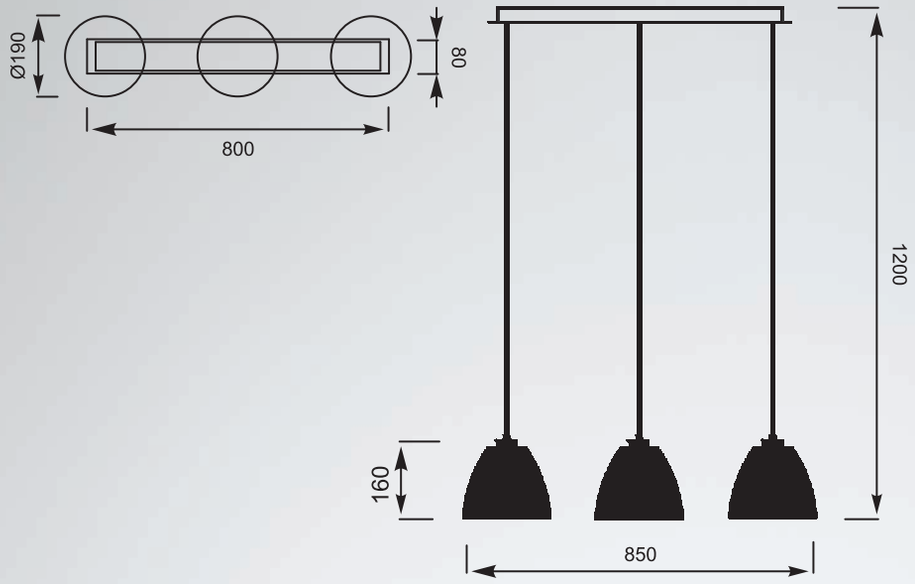

PICO
Pendant lamp
MD9023-3B (Black)
3xE27 MAX 60W
black aluminium wire shade
with shade opal glass inside

PICO
Pendant lamp
MD9023-3B (Silver)
3xE27 MAX 60W
silver aluminium wire shade
with shade opal glass inside

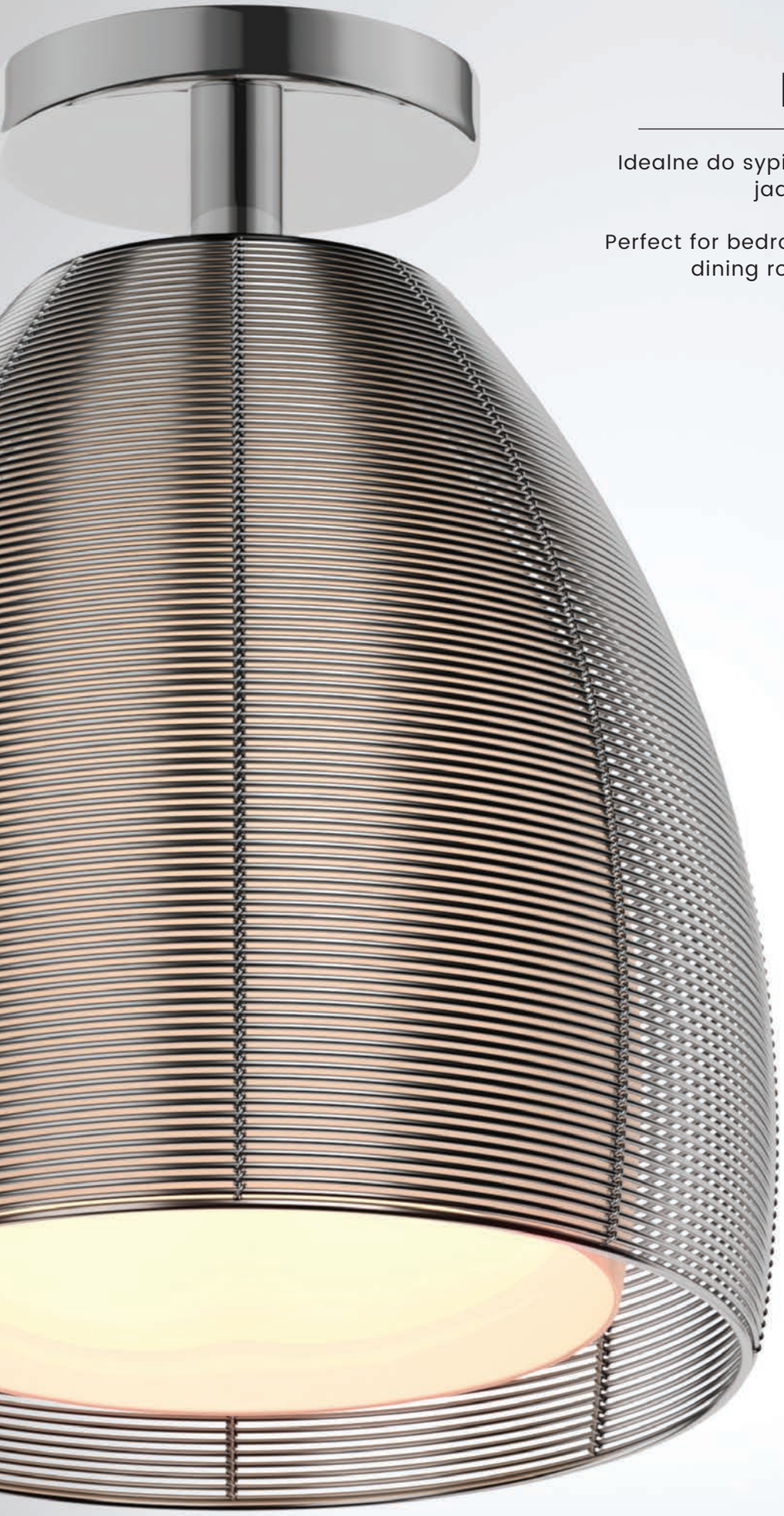

PICO

Idealne do sypialni, salonów, gabinetów, jadalni i kuchni.

Perfect for bedrooms, living rooms, offices, dining rooms and kitchens.

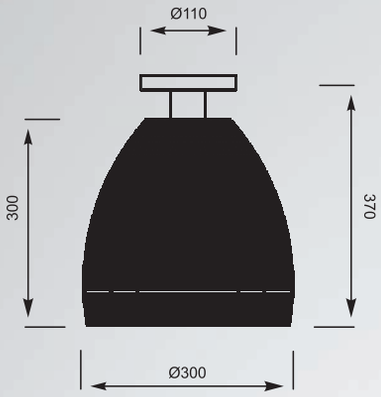

PICO
Ceiling lamp
MX9023-1L (Black)
1xE27 MAX 60W
black aluminium wire shade
with shade opal glass inside

PICO
Ceiling lamp
MX9023-1L (Silver)
1xE27 MAX 60W
silver aluminium wire shade
with shade opal glass inside

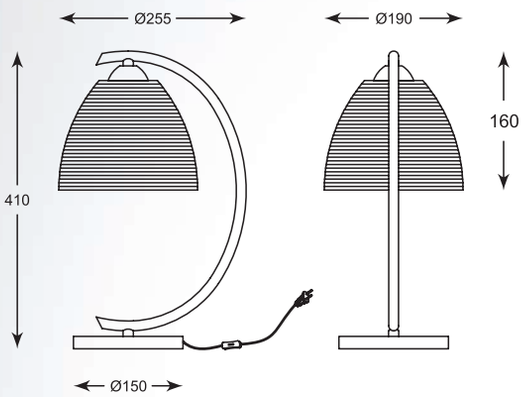

PICO
Table lamp
MT9023-1S (Black)
1xE27 MAX 60W
black aluminium wire shade
with shade opal glass inside

PICO
Table lamp
MT9023-1S (Silver)
1xE27 MAX 60W
silver aluminium wire shade
with shade opal glass inside

FILO

LAMPA WISZĄCA

Pendant lamp, MD1452-1L,
1xE27 MAX 60W
silver aluminium wire shade,
opal glass inside.

SKELETON
Pendant lamp
HP1335-WH
1xE27 MAX 40W
white metal wire shade
with plastic shade inside

SKELETON
Pendant lamp
HP1335-BL
1xE27 MAX 40W
black metal wire shade
with plastic shade inside

SKELETON

LAMPA WISZĄCA

Stożkowaty klosz otoczony został metalową czaszą w formie ostrokątnej bryły, co tworzy niepowtarzalny design dla wymagających.

Pendant lamp. The conical lamp shade is surrounded by a metal canopy in the form of an oblong body, which creates a unique design for demanding users.

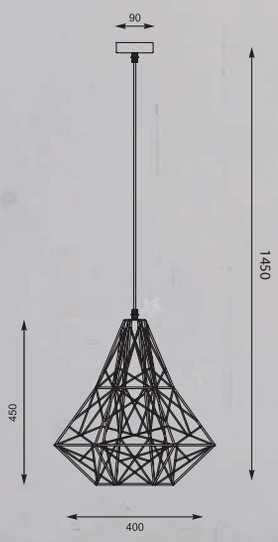

ZUMALINE

ROD

LAMPA WISZĄCA

Pendant lamp,
HP1463-BL, 1xE27 MAX 40W
black metal rod shade, black canopy

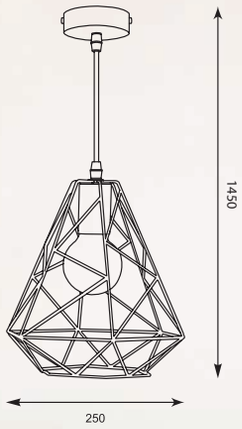

GRID

LAMPA WISZĄCA

Pendant lamp, HP1428, 1xE27 MAX 40W
black metal rod shade, black canopy

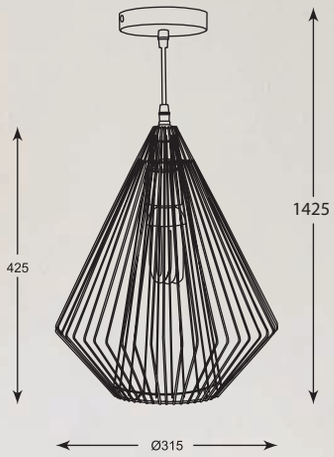

ZUMALINE

TORCH

HP1423A-20-BL

ATOM

HP1799-30-BL

STAG

HP1776-BL

TORCH
Pendant lamp
HP1423A-20-BL
1xE27 MAX 40W
black metal canopy,
black metal wire shade

ATOM
Pendant lamp
HP1799-30-BL
1xE27 MAX 40W
black metal canopy,
black metal wire shade

STAG
Pendant lamp
HP1776-BL
1xE27 MAX 40W
black metal canopy,
black metal wire shade

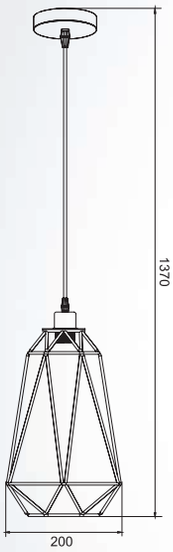

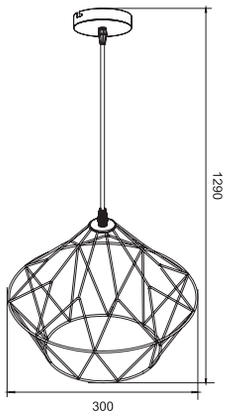

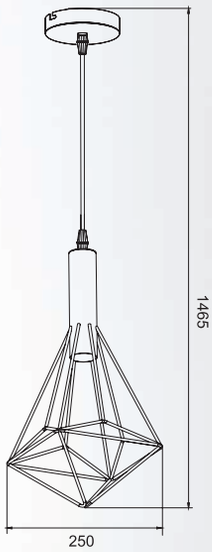

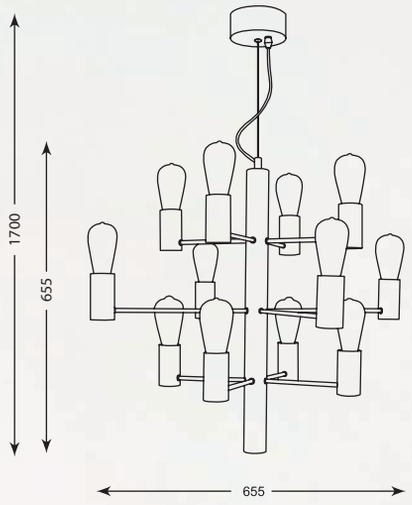

CANDEL

LAMPA WISZĄCA

Pendant lamp, HP1811-12, 12xE27 MAX 40W
metal chrome body

NOVIA

LAMPA WISZĄCA

Pendant lamp, RLD94217-6A, 6xE14 40W
white metal body and canopy

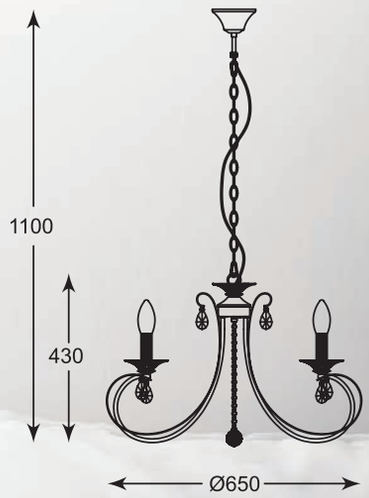

ZUMALINE

SOLE

LAMPA WISZĄCA

Biały klosz o nieregularnej powierzchni składa się z kwadratowych płytek, które wykonane zostały z tworzywa poliwęglanowego.

Pendant lamp. The white shade with an irregular surface consists of square tiles, which are made of polycarbonate plastic.

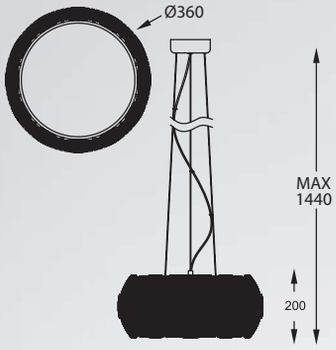

SOLE
Pendant lamp
P0317-03H-S8A1
3xE27 MAX 24W
white polycarbonate
plastic plates,
white metal canopy

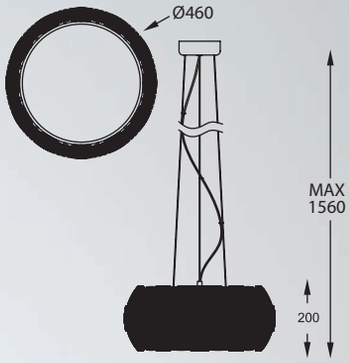

SOLE
Pendant lamp
P0317-05H-S8A1
5xE27 MAX 24W
white polycarbonate
plastic plates,
white metal canopy

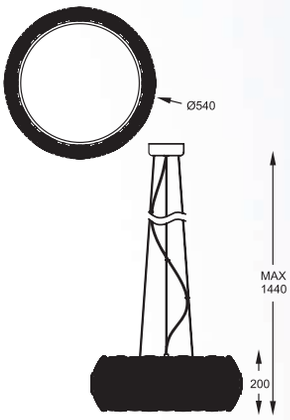

SOLE
Pendant lamp
P0317-06H-S8A1
6xE27 MAX 24W
white polycarbonate
plastic plates,
white metal canopy

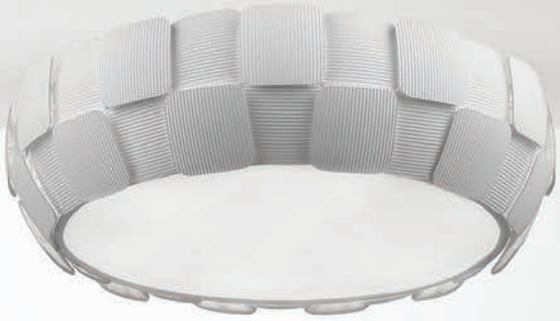

SOLE

Uniwersalna, biała kolorystyka idealnie sprawdzi się zarówno w nowoczesnych wnętrzach, jak i klasycznych.

Universal, white colors are ideal for both modern and classic interiors.

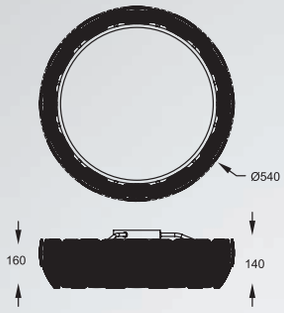

SOLE
Ceiling lamp
C0317-06C-S8A1
6xE27 MAX 24W
white polycarbonate
plastic plates,
white metal canopy

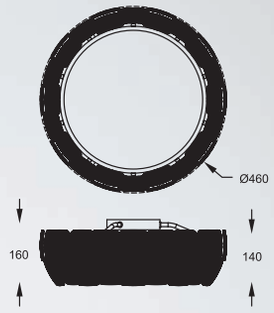

SOLE
Ceiling lamp
C0317-04C-S8A1
4xE27 MAX 24W
white polycarbonate
plastic plates,
white metal canopy

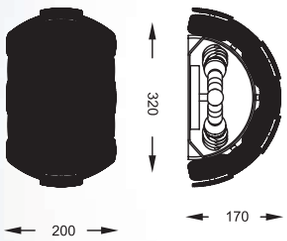

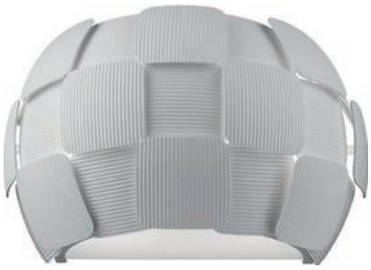

SOLE
Wall lamp
W0317-02K-S8A1
2xE27 MAX 13W
white polycarbonate
plastic plates,
white metal canopy

GIANNA

LAMPA WISZĄCA

Ażurowe klosze o kryształowym zdobieniu to jednocześnie nowoczesna i elegancka propozycja z naszej oferty.

Pendant lamp. Crystal-decorated openwork lampshades are an perfect choice for both modern and elegant rooms.

GIANNA
Pendant lamp
P0386-4A-B5AC
4xLED 5W 1880LM 3000K
metal chrome shade with crystals,
metal chrome canopy

GIANNA
Pendant lamp
P0386-01A-F4AC
1xLED 5W 470LM 3000K
metal chrome shade with crystals,
metal chrome canopy

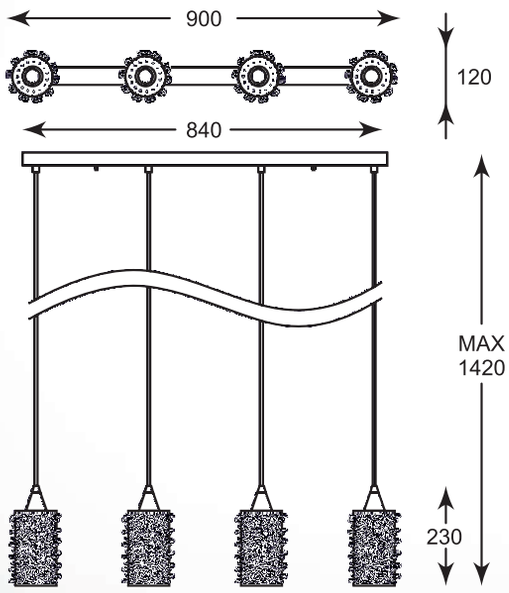

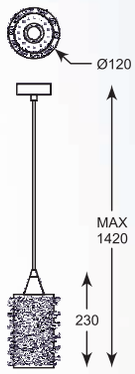

CESARE

Perfekcyjna propozycja łącząca w sobie klasyczną elegancję z nowoczesnym wykończeniem.

A perfect combination of classic elegance with a modern touch.

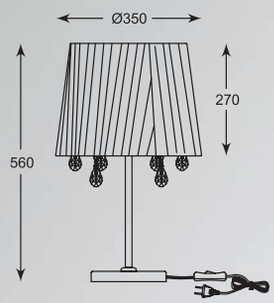

CESARE
Table lamp
RLT94350-3A
3xE14 MAX 40W
white stripes textil shade
with crystals inside
metal chrome body

CESARE
Table lamp
RLT94350-3B
3xE14 MAX 40W
black stripes textil shade
with crystals inside
metal chrome body

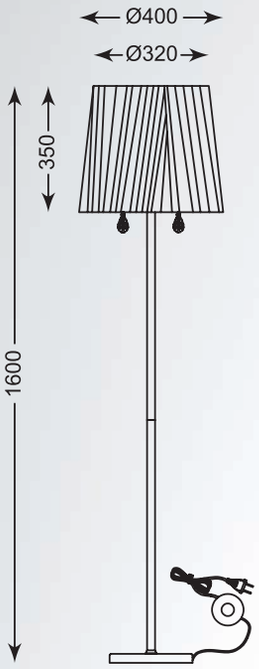

CESARE
Floor lamp
RLL94350-5A
5xE14 MAX 40W
white stripes textil shade
with crystals inside
metal chrome body

CESARE
Floor lamp
RLL94350-5B
5xE14 MAX 40W
black stripes textil shade
with crystals inside
metal chrome body

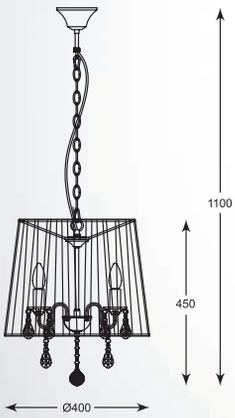

CESARE
Pendant lamp
RLD94350-5A
5xE14 MAX 40W
white stripes textil shade
with crystals inside
metal chrome body and
canopy

CESARE
Pendant lamp
RLD94350-5B
5xE14 MAX 40W
black stripes textil shade
with crystals inside
metal chrome body and
canopy

ANDREA

Czarny odcień oprawy oraz złote wnętrze tworzą unikalny design, który będzie pasował do eleganckich pomieszczeń.

The black shade of the frame and golden interior create a unique design that will be suitable for elegant rooms.

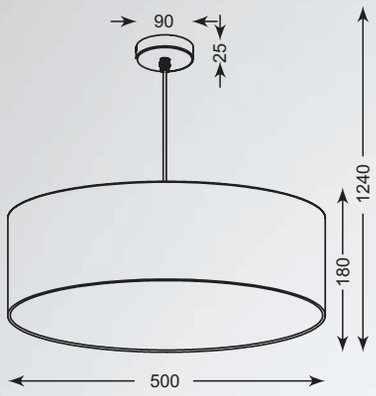

ANDREA
Pendant lamp
HP1392-500-BL+PB
1xE27 MAX 40W
satin steel metal canopy
fabric shade black outside and gold inside

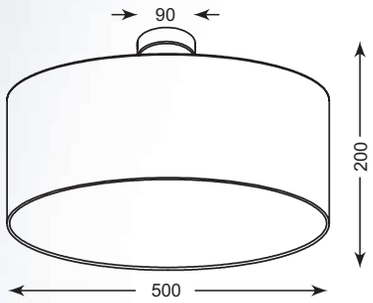

ANDREA
Ceiling lamp
HP1392-C-500-BL+PB
1xE27 MAX 40W
satin steel metal canopy
fabric shade black outside and gold inside

REA

Tradycyjny wygląd połączono z gustownym, szklanym elementem dekoracyjnym, dzięki czemu lampa nabrała nowego wymiaru.

Traditional look was combined with a stylish glass decorative element, which gave the lamp fresh look.

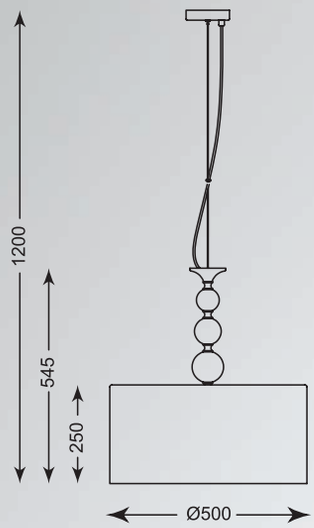

REA
Pendant lamp
RLD93163-1B
1xE27 MAX 60W
black fabric shade,
metal chrome body
and base,
glass balls

REA
Pendant lamp
RLD93163-1W
1xE27 MAX 60W
white fabric shade,
metal chrome body
and base,
glass balls

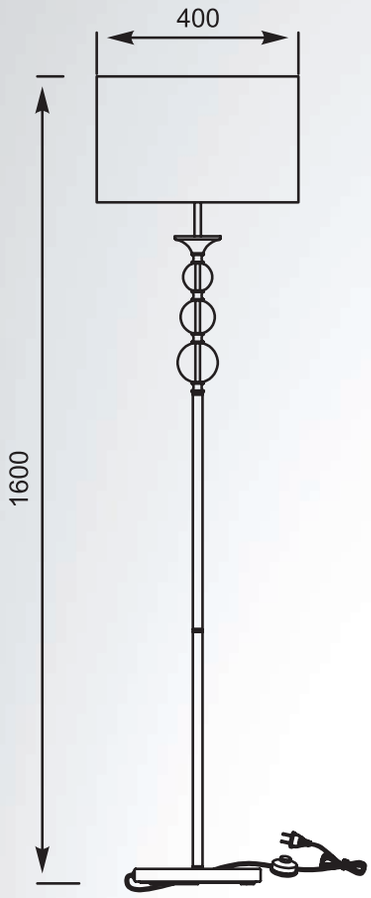

REA
Floor lamp
RLL93163-1B
1xE27 MAX 60W
black fabric shade,
metal chrome body
and base,
glass balls

REA
Floor lamp
RLL93163-1W
1xE27 MAX 60W
white fabric shade,
metal chrome body
and base,
glass balls

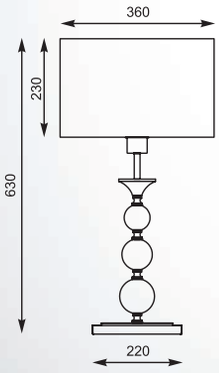

REA
Table lamp
RLT93163-1B
1xE27 MAX 60W
black fabric shade,
metal chrome body
and base,
glass balls

REA
Table lamp
RLT93163-1W
1xE27 MAX 60W
white fabric shade,
metal chrome body
and base,
glass balls

CANDE

Urzeka swoją prostotą i nowoczesnym wykonaniem. Seria znakomicie pasuje do wnętrz w stylu industrialnym.

It impresses with its simplicity and modern design. The series is perfect for industrial style interiors.

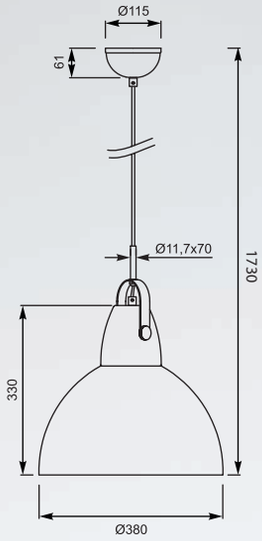

CANDE
Pendant lamp
TS-110611P-CH
1xE27 MAX 60W
chrome metal shade, white inside

CANDE
Pendant lamp
TS-110611P-BK
1xE27 MAX 60W
black metal shade, white inside

CANDE
Pendant lamp
TS-110611P-WH
1xE27 MAX 60W
white metal shade, white inside

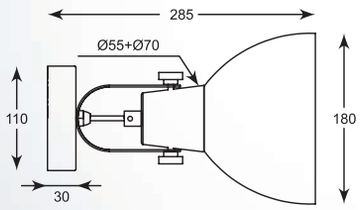

CANDE
Wall lamp
TS-140605W-BK
1xE27 MAX 60W
black metal shade, white inside

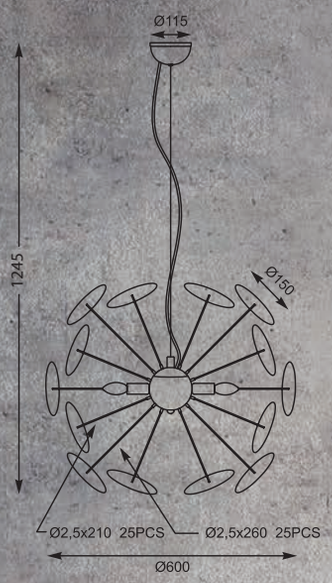

DOTS

LAMPA WISZĄCA

Pendant lamp, TS-081111P-BK,
6xE14 MAX 40W
black metal canopy,
black outside and gold inside

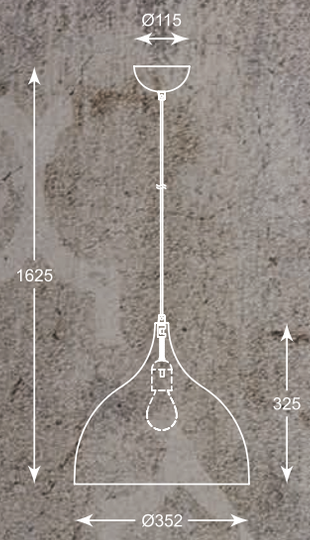

MARCO

LAMPA WISZĄCA

Pendant lamp, TS-101015P-BKGO, 1xE27 MAX 60W
black metal shade with gold inside

ZUMALINE

ANTENNE

Gustowna kolorystyka oraz Industrialny design.

Tasteful colours & Industrial design.

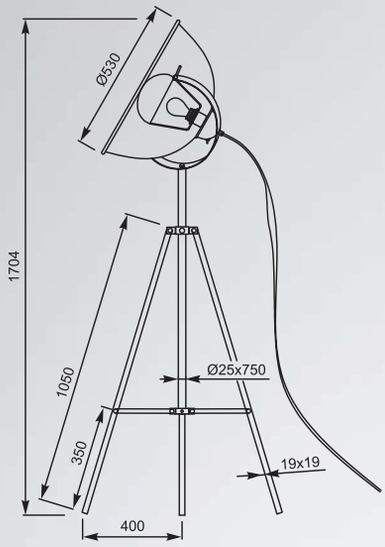

ANTENNE
Floor lamp
TS-090522F-BK
1xE27 MAX 60W
black metal with gold inside

ANTENNE
Floor lamp
TS-090522F-WHSI
1xE27 MAX 60W
white metal with silver inside

ANTENNE
Floor lamp
TS-090522F-BKSI
1xE27 MAX 60W
black metal with silver inside

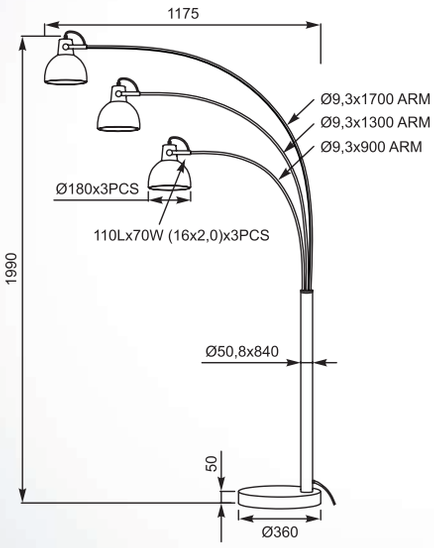

ANTENNE
Floor lamp
TS-140123F-BKGO
3xE27 MAX 40W
black metal body and base,
black shade with gold inside

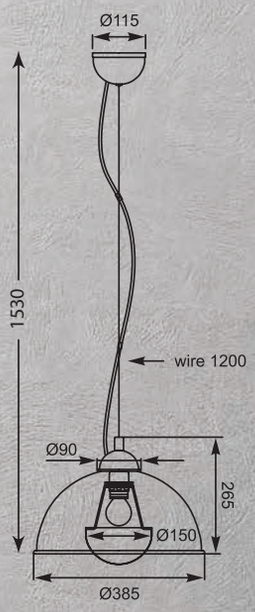

ANTENNE

LAMPA WISZĄCA

Pendant lamp, TS-071003PM-BKGO

1xE27 MAX 60W, black metal conopy,
black shade with gold inside

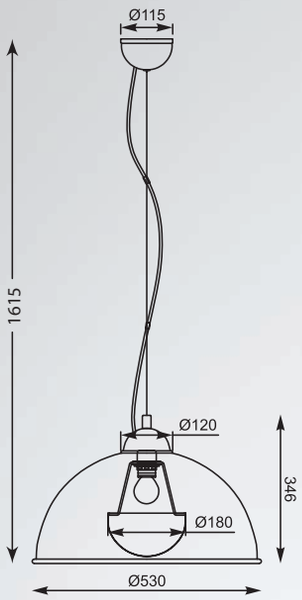

ANTENNE
Pendant lamp
TS-071003P-WHSI
1xE27 MAX 60W
white metal canopy
white shade with silver inside

ANTENNE
Pendant lamp
TS-071003P-BKSI
1xE27 MAX 60W
black metal canopy
black shade with silver inside

ANTENNE
Pendant lamp
TS-071003P-BKGO
1xE27 MAX 60W
black metal canopy,
black shade with gold inside

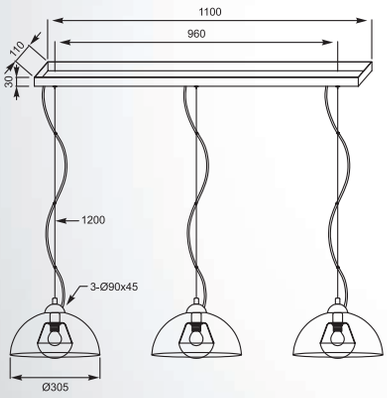

ANTENNE
Pendant lamp
TS-120404P-BKGO
3xE27 MAX 60W
black metal canopy,
black shade with gold inside

LUZIA

LAMPA PODŁOGOWA

Floor lamp, TS-050402F-BKGO, 1xE27 MAX 60W
black metal body and base,
black metal shade with gold inside

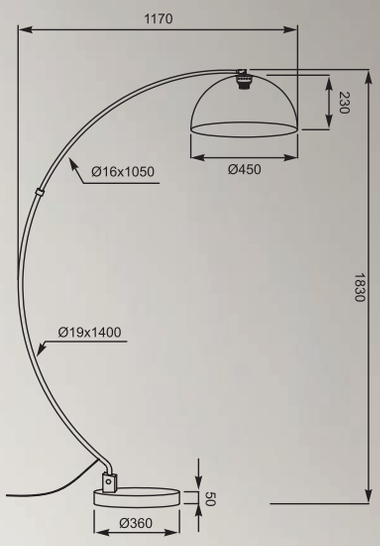

1150
Ø9,3 x 1700
Ø9,3 x 1500
Ø9,3 x 1300
Ø9,3 x 1100
Ø9,3 x 900
Ø135
2080
Ø50,8 x 840
50
Ø360
BRANCA
LAMPA PODŁOGOWA
Floor lamp, TS-5805-BKGO, 5xE14 MAX 40W
black metal body and base, black shade gold inside
ZUMALINE

ZODIAC

LAMPA PODŁOGOWA

Stabilna metalowa konstrukcja z pięcioma łukowatymi ramionami, to perfekcyjne źródło światła do salonu i otwartych przestrzeni.

Floor lamp. Stable construction with five arched arms made of metal is the perfect light source for living rooms and open spaces.

ZODIAC
Floor lamp
TS-5805
5xE14 MAX 40W
metal chrome body

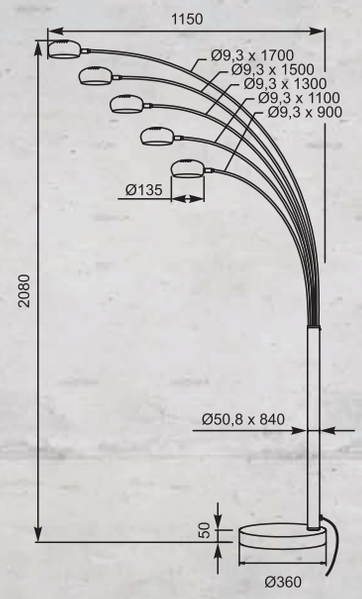

ZODIAC
Floor lamp
TS-5805-BK
5xE14 MAX 40W
metal shiny black body

ZUMALINE

VENTI

LAMPA PODŁOGOWA

Ciekawa konstrukcja pełna elegancji.
Oświetlenie idealne do wysokich
i przestronnych wnętrz.

Floor lamp. An interesting
construction full of elegance.
Perfect lighting for high
and spacious interiors.

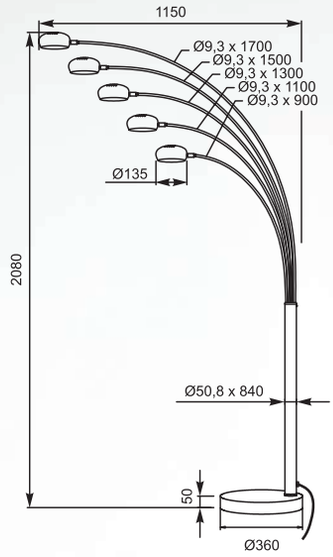

VENTI
Floor lamp
TS-5805G-RE
5xE14 MAX 40W
metal chrome body,
red glass shade

VENTI
Floor lamp
TS-5805G
5xE14 MAX 40W
metal chrome body,
white glass shade

SOHO

LAMPA PODŁOGOWA

Floor lamp, TS-010121MM, 1xE27 MAX 60W
metal chrome with black marble base.

ZUMALINE

VISION

LAMPA PODŁOGOWA

Floor lamp, TS-010121W, 1xE27 MAX 60W
metal chrome with acrylic shade, white marble base

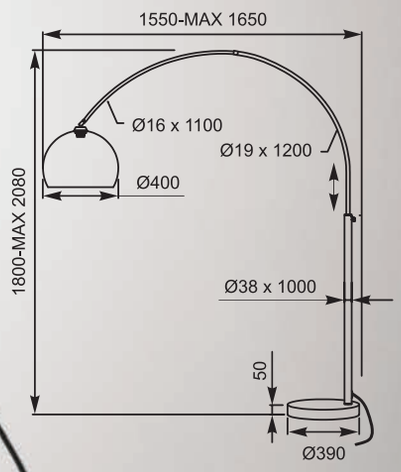

GLAM

LAMPA PODŁOGOWA

Floor lamp, TS-010121WC, 1xE27 MAX 60W
metal chrome with acrylic shade,
stone base with chrome cover

ZUMALINE

MADISON

LAMPA PODŁOGOWA

Idealny elemet dekoracyjny do
nowoczesnych, jak i klasycznych wnętrz.

Floor lamp. The perfect decorative element
for modern and classic interiors.

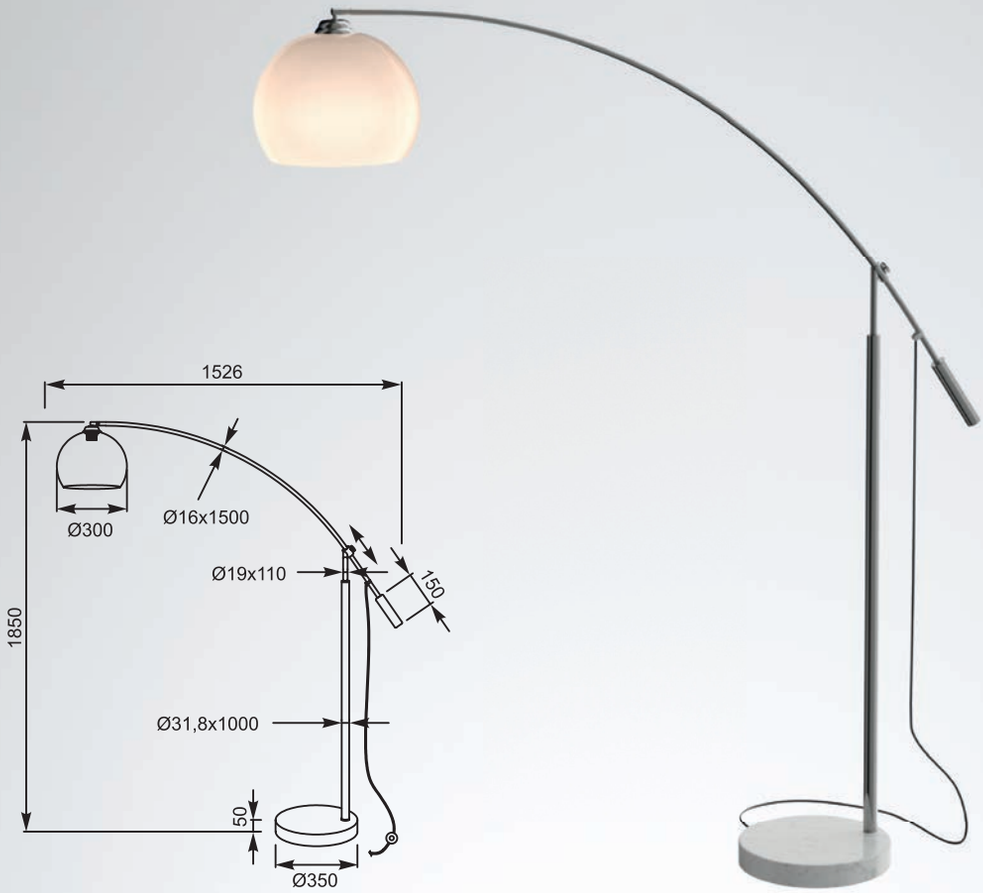

MADISON
Floor lamp
TS-061121F
1xE27 MAX 60W
metal chrome body with
acrylic white
shade, white marble base

MANHATTAN

LAMPA
PODŁOGOWA

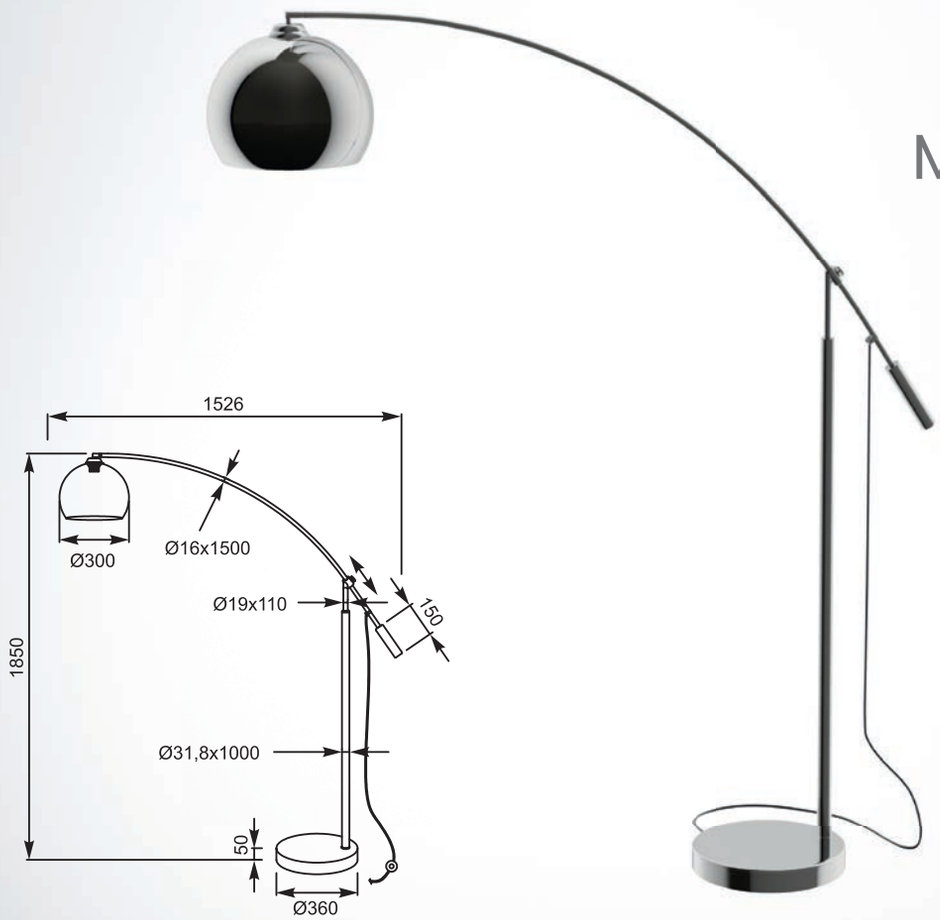

MANHATTTAN
Floor lamp
TS-061121M
1xE27 MAX 60W
metal chrome body
and shade
chrome base

AMADO

LAMPA PODŁOGOWA

Idealne rozwiązanie dla osób, które lubią wnętrza w stylu industrialnym lub loftowym.

Floor lamp. Perfect choice for people who like interiors in industrial or loft style.

AMADO
Floor lamp
SL556-CH
1xE27 MAX 40W
metal chrome body

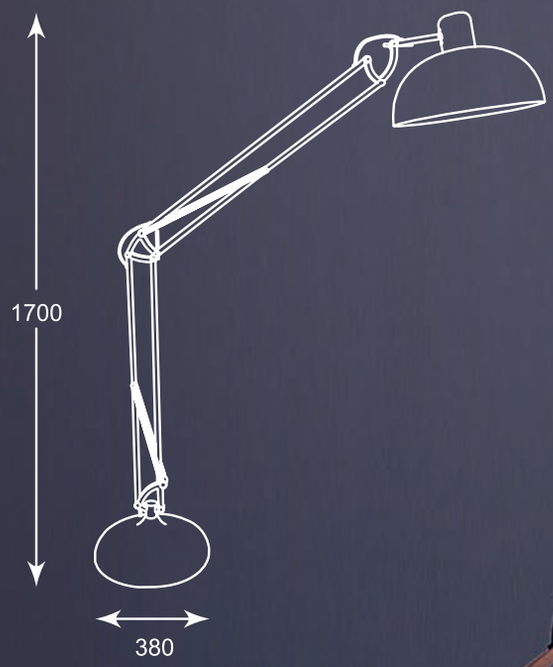

AMADO
Floor lamp
SL556-CO
1xE27 MAX 40W
red copper metal body

ZUMALINE

NEW YORK

Floor lamp, MJ65-3, 3xE14 MAX 40W
matt silver body and base,
opal glass shade

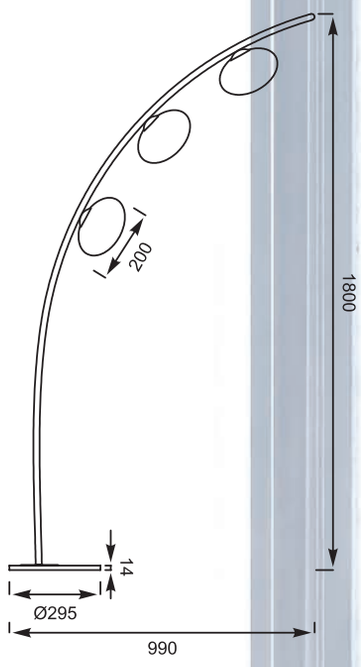

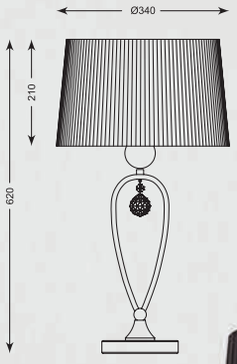

BELLO

LAMPA STOŁOWA

Stabilna okrągła baza podtrzymuje oryginalnie wykonaną nóżkę zwieńczoną dekoracyjnym wisiorem, na który składają się dwa kryształki.

Table lamp. Stable round base supports the original leg crowned with a decorative necklace made of two crystals.

BELLO
Table lamp
RLT93224-1B
1xE27 MAX 60W
black stripes textil shade
with crystal inside,
metal chrome body

BELLO
Table lamp
RLT93224-1A
1xE27 MAX 60W
white stripes textil shade
with crystal inside,
metal chrome body

DECO

Połączenie nowoczesności z klasyką urzeknie niejednego miłośnika eleganckich dodatków.

The combination of modernity and classics will captivate many fans of elegant accessories.

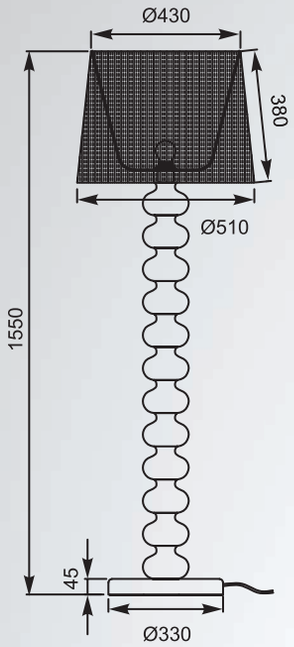

DECO
Floor lamp
TS-06216F-BK
1xE27 MAX 60W
metal chrome body,
black stripes textil shade

DECO
Floor lamp
TS-06216F-CHWH
1xE27 MAX 60W
metal chrome body,
white stripes textil shade

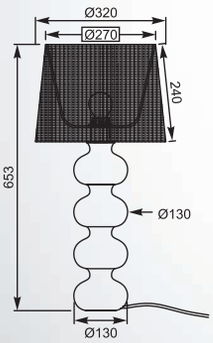

DECO
Table lamp
TS-06216T-BK
1xE27 MAX 60W
metal chrome body,
black stripes textil shade

DECO
Table lamp
TS-06216T-CHWH
1xE27 MAX 60W
metal chrome body,
white stripes textil shade

LORITA

Wysoki tekstylny abażur został zamocowany na ciekawie ukształtowanej podstawie, dzięki czemu model zyskał nowoczesny charakter.

High textile lampshade was mounted on an interestingly shaped base, which gave the model a modern character.

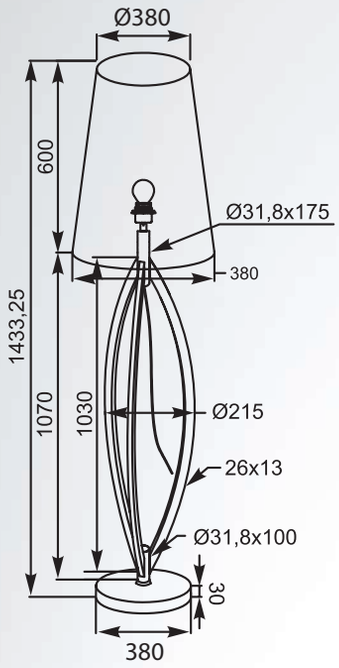

LORITA
Floor lamp
TS-110314F-WH
1xE27 MAX 60W
white metal body and base,
white fabric shade

LORITA
Floor lamp
TS-110314F-BK
1xE27 MAX 60W
black metal body and base,
black fabric shade

COSTANZA

LAMPA PODŁOGOWA

Oświetlenie w typie wędki do przestronnych salonów, gabinetów i sypialni.
Rozświetli wnętrza w stylu klasycznym jak i nowoczesnym.

Rod type lighting for spacious living rooms, offices and bedrooms.
It will illuminate the interior in both classic and modern style.

COSTANZA
Floor lamp
TS-070720F-WH
1xE27 MAX 60W
white metal body and base,
white fabric shade

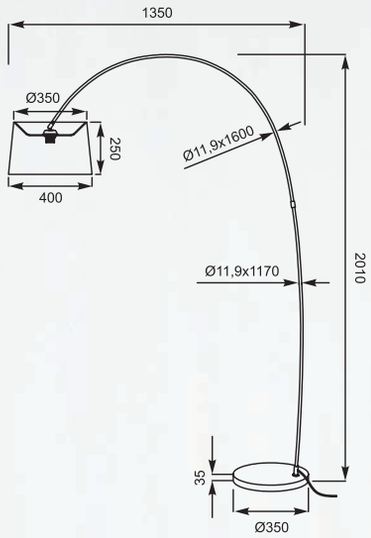

COSTANZA
Floor lamp
TS-070720F-BK
1xE27 MAX 60W
black metal body and base,
black fabric shade

ZUMALINE

HUGO

LAMPA PODŁOGOWA

Floor lamp, TS-120630F-BK, 1xE27 MAX 60W
shiny black metal body, black fabric shade

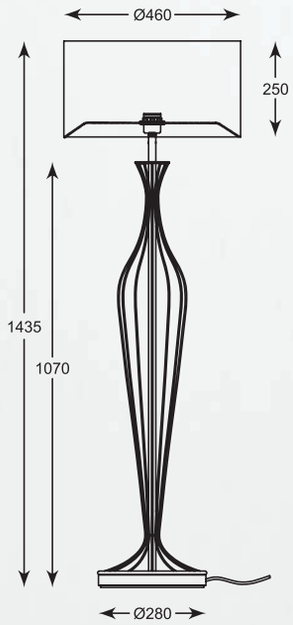

SEVILLE

LAMPA PODŁOGOWA

Floor lamp,
TS-062909F-BR,
1xE27 MAX 60W
antique brass gold body,
black-gold shade

ZUMALINE

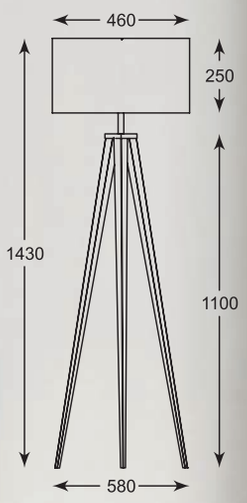

MARESCA

LAMPA PODŁOGOWA

Niebanalna trójnoga podstawa połączona z klasycznym kloszem.

Floor lamp. Original tripod base combined with a classic shade.

MARESCA
Floor lamp
TS-170429F-BK
1xE27 MAX 60W
black metal
standing base,
black fabric shade

MARESCA
Floor lamp
TS-170429F-WH
1xE27 MAX 60W
white metal
standing base,
white fabric shade

PEDRO

Floor lamp, SL570-2-SS+GR
1xE27 MAX 40W + 1xG9 MAX 42W
silver metal body and base, gray fabric shade

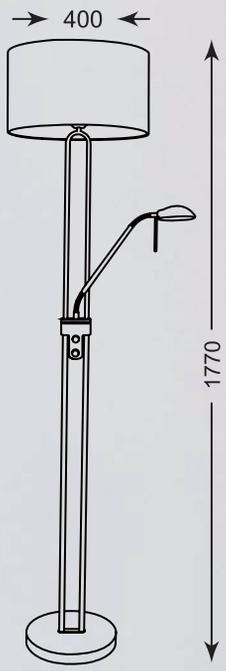

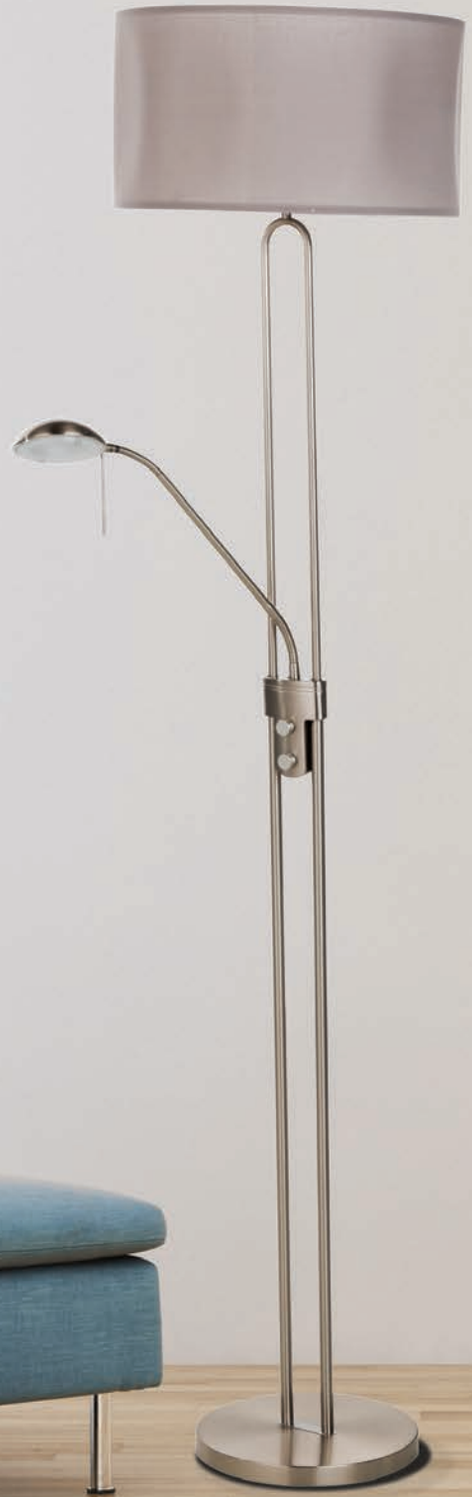

ZUMALINE

ENERGY

Floor lamp
TS-065909F
1xE27 MAX 60W
chrome shade with glass cover,
metal chrome and black base

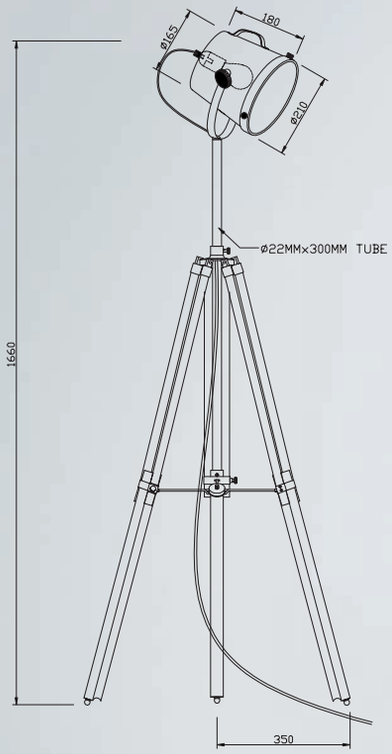

MILO

Floor lamp
SL598-CH
1xE27 MAX 40W

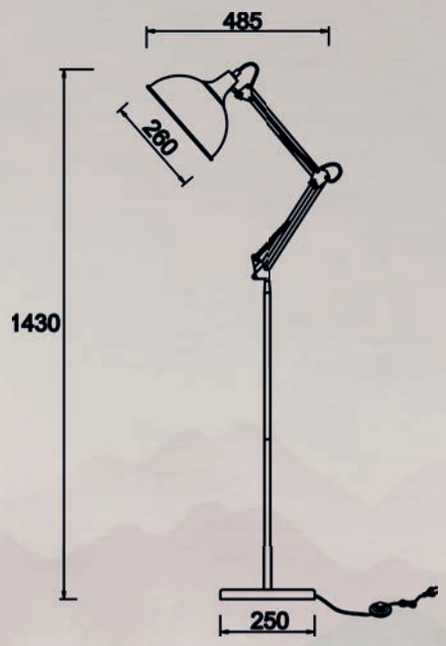

ZUMALINE

LOYA

Prosta forma oraz minimalizm - to doskonałe uzupełnienie przestronnych i nowoczesnych wnętrz.

Simple form and minimalism - a perfect complement to spacious and modern interiors.

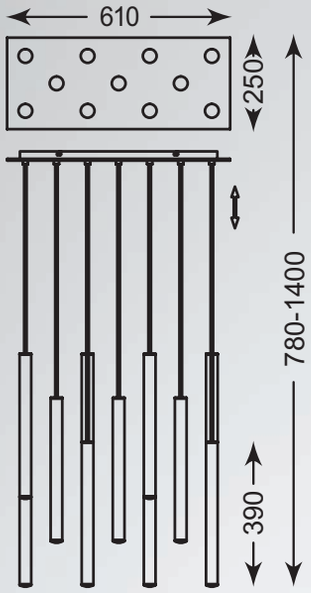

LOYA
Pendant lamp
P0461-11A-B5SC
11xLED MAX 5W, 4950LM 3000K
chrome, french gold,
antique copper metal

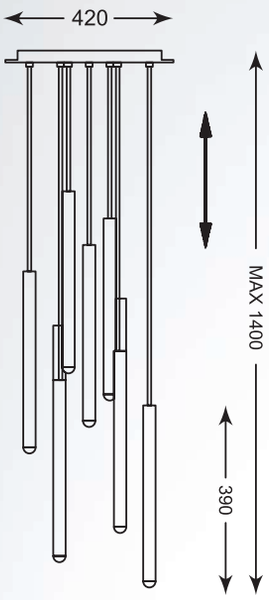

LOYA
Pendant lamp
P0461-09C-B5SC
9xLED MAX 5W, 4050 LM 3000K
chrome, french gold,
antique copper, metal

LOYA
Pendant lamp
P0461-09C-B5F4
9xLED MAX 5W, 4050 LM 300K
metal chrome body

LOYA
Pendant lamp
P0461-09C-B5SB
9xLED MAX 5W, 4050 LM 3000K
french gold, matt white, metal

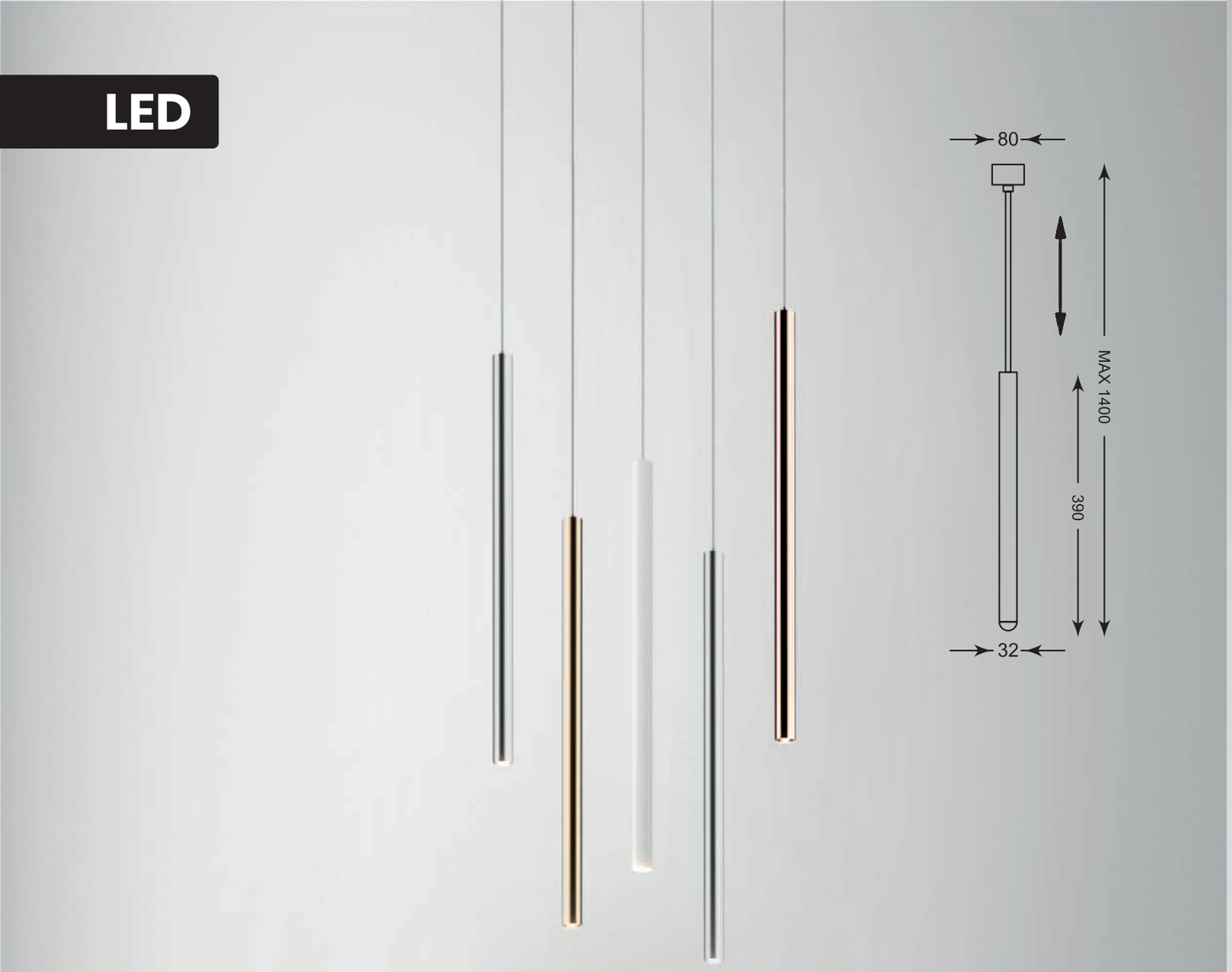

LOYA

1xLED MAX 5W, 450 LM 3000K

LOYA
Pendant lamp
P0461-01A-L8L8
1xLED MAX 5W, 450 LM 3000K
pearl black, metal

LOYA
Pendant lamp
P0461-01A-F7F7
1xLED MAX 5W, 450 LM 3000K
french gold, metal

LOYA
Pendant lamp
P0461-01A-S8S8
1xLED MAX 5W, 450 LM 3000K
matt white , metal

LOYA
Pendant lamp
P0461-01A-F4F4
1xLED MAX 5W, 450 LM 3000K
chrome, metal

LOYA
Pendant lamp
P0461-01A-L7L7
1xLED MAX 5W, 450 LM 3000K
antique copper, metal

LOYA
Pendant lamp
P0461-01A-K4K4
1xLED MAX 5W, 450 LM 3000K
shining gold, metal

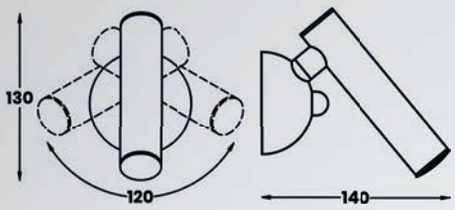

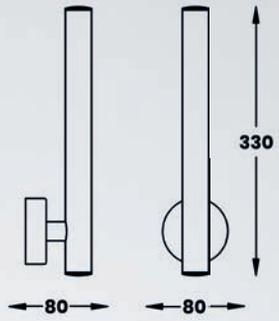

LOYA
Wall lamp
W0461-01A-S8S8
1xLED MAX 5W 450LM 3000K
matt white, metal

LOYA
Wall lamp
W0461-02B-S8S8
2xLED MAX 5W 450LM 3000K
matt white, metal

LOYA
Wall lamp
W0461-02B-F4F4
2xLED MAX 5W 450LM 3000K
chrome, metal

LOYA
Wall lamp
W0461-01A-F4F4
1xLED MAX 5W 450LM 3000K
chrome, metal

LOYA
Wall lamp
W0461-01A-F7F7
1xLED MAX 5W 450LM 3000K
french gold, metal

LOYA
Wall lamp
W0461-02B-F7F7
2xLED MAX 5W 450LM 3000K
french gold, metal

LOYA
Wall lamp
W0461-02B-L8L8
2xLED MAX 5W 450LM 3000K
pearl black, metal

ONE

Seria opierająca się na niezwykłej dbałości o szczegóły, które nadają jej nietuzinkowego charakteru.

This series is characterized by extraordinary care for details, that gives it a unique character.

ONE
Pendant lamp
P0461-01E-F4F4
1xLED MAX 5W 450LM 3000K
metal chrome body, acrylic bar with bubbles inside

ONE
Pendant lamp
P0461-01E-F7F7
1xLED MAX 5W 450LM 3000K
metal french gold body, acrylic bar with bubbles inside

ONE
Pendant lamp
P0461-01E-S8S8
1xLED MAX 5W 450LM 3000K
metal matt white body, acrylic bar with bubbles inside

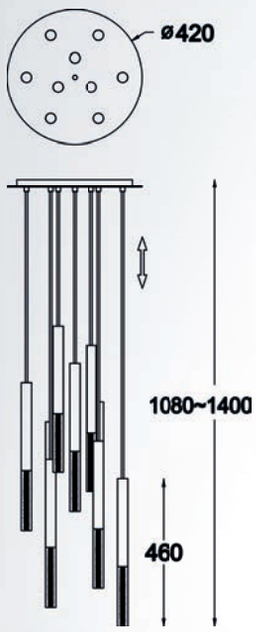

ONE
Pendant lamp
P0461-09L-B5F4
9xLED MAX 5W 4050LM 3000K
metal chrome body, acrylic bar with bubbles inside

ONE
Pendant lamp
P0461-09L-B5F7
9xLED MAX 5W 4050LM 3000K
metal french gold body, acrylic bar with bubbles inside

ONE
Pendant lamp
P0461-09L-B5S8
9xLED MAX 5W 4050LM 3000K
metal matt white body, acrylic bar with bubbles inside

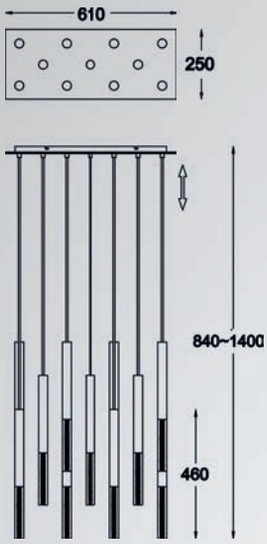

ONE
Pendant lamp
P0461-11L-B5F7
11xLED MAX 55W 4950LM 3000K
metal french gold body, acrylic bar
with bubbles inside

ONE
Pendant lamp
P0461-11L-B5F4
11xLED MAX 55W 4950LM 3000K
metal chrome body, acrylic bar with
bubbles inside

ONE
Pendant lamp
P0461-11L-B5S8
11xLED MAX 55W 4950LM 3000K
metal matt white body, acrylic bar
with bubbles inside

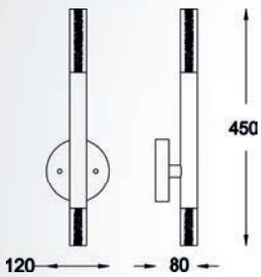

ONE
Wall lamp
W0461-02E-F4F4
2xLED MAX 10W 900LM 3000K
metal chrome body, acrylic bar with
bubbles inside

ONE
Wall lamp
W0461-02E-F7F7
2xLED MAX 10W 900LM 3000K
metal french gold body, acrylic bar
with bubbles inside

ONE
Wall lamp
W0461-02E-S8S8
2xLED MAX 10W 900LM 3000K
metal matt white body, acrylic bar
with bubbles inside

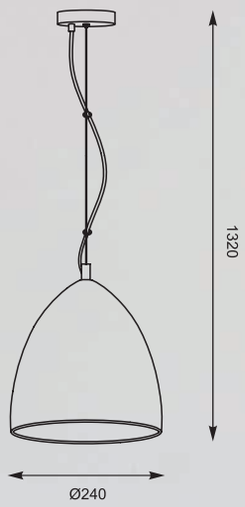

STONE

LAMPA WISZĄCA

Pendant lamp, HP1342, 1xE27 MAX 40W
grey concrete shade

ZUMA LINE

LIMA

Serię charakteryzuje przede wszystkim nietypowy design, który dopełni nowoczesne wnętrza, gdzie łamanie konwencji oraz innowacyjność formy to podstawa.

The series is characterized mainly by an unusual design, which will complete the modern interior, where breaking the convention and innovation of form is the basic idea.

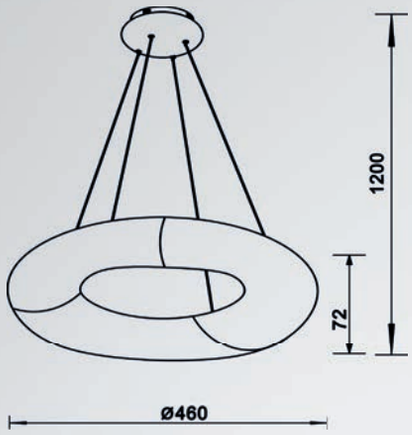

LIMA
Pendant lamp
15010002
3xLED MAX 23W 1900LM 3000K
metal canopy rotational moulding
polietylen shade

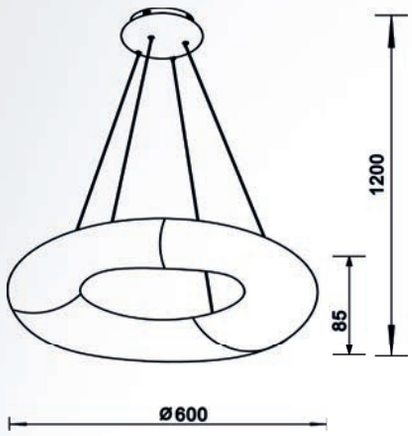

LIMA
Pendant lamp
15010003
3xLED MAX 40W 3400LM 3000K
metal canopy rotational moulding
polietylen shade

FALCON

Pendant lamp
15200002
1xLED MAX 60W 3000LM 4000K
metal canopy rotational moulding polietylen shade

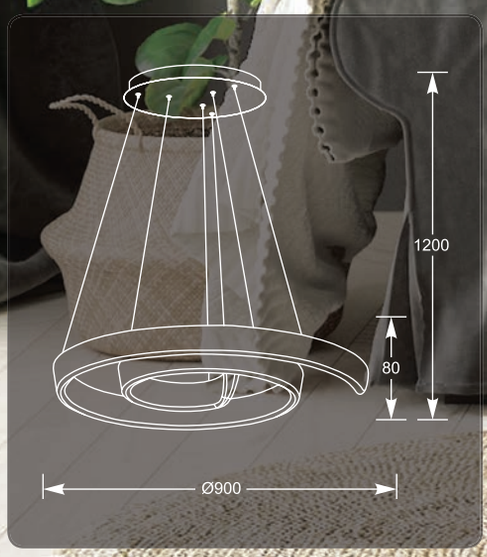

LED

LUIS

Pendant lamp, HSP5291C-CH,
LED 5W 250LM 3000K
metal chrome canopy, acrylic
shade with the bubbles inside

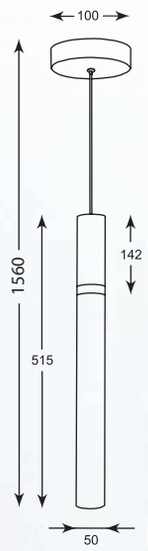

ZUMALINE

LED

VALENTI

LAMPA SUFITOWA

Projekt skierowany do miłośników minimalizmu i geometrycznych form. Zachwyca swoją finezją oraz nowoczesnością.

Ceiling lamp. The project is addressed to lovers of minimalism and geometric forms. It delights with its sophistication and modernity.

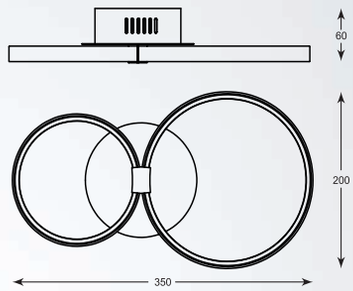

VALENTI
Ceiling lamp
MX48002-2B
LED 12W 700LM 3000K
metal chrome canopy,
aluminium body,
acrylic shade

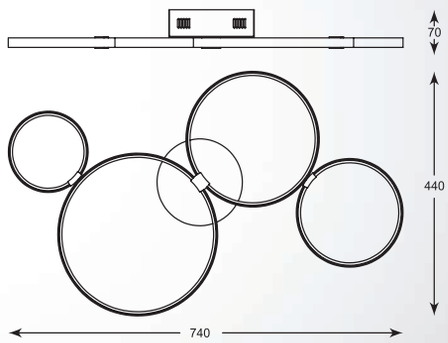

VALENTI
Ceiling lamp
MX48002-4
LED 27W 1600LM 3000K
metal chrome canopy,
aluminium body,
acrylic shade

SEDA

Niebanalna forma oraz nowoczesny design, które nadadzą wnętrzu niepowtarzalny charakter.

Original form and modern design, which will give the interior a truly unique character.

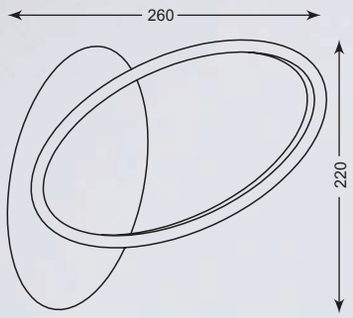

SEDA
Wall lamp
MB920125-1
1xLED MAX 9W, 450LM, 3000K,
matt white, aluminium,
iron, silicon

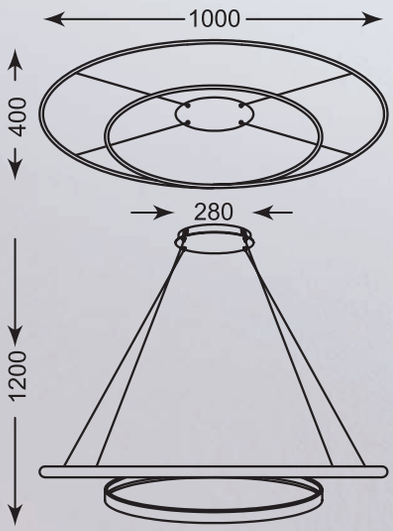

SEDA
Pendant lamp
MP57054-2A
LED 40W, 2000LM 3000K
matt white, aluminium,
iron, silicon

BALVI

LAMPA WISZĄCA

Przykład oświetlenia centralnego, które olśniewa swoim nowoczesnym designem i interesującą formą.

Pendant lamp. Example of central lighting that shines through with its modern design and interesting form.

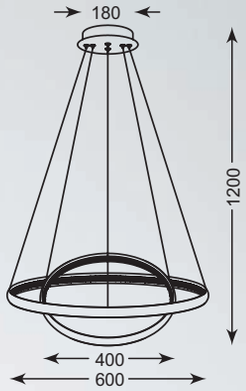

BALVI
Pendant lamp
MP57043-2
LED 30W 1800LM 3000K
metal chrome canopy,
chrome aluminium body
with crystal inside

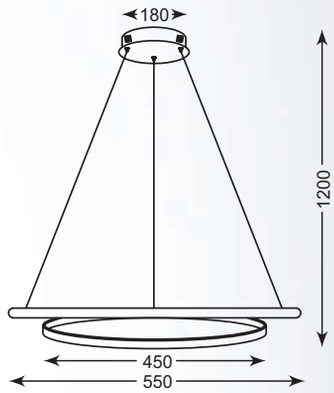

BALVI
Pendant lamp
MP57056-A
LED 30W 1800LM 3000K
metal chrome canopy,
chrome aluminium body
with crystal inside

PERIA

Technologia LED w finezyjnej formie rozświetli eleganckie a zarazem nowoczesne wnętrza.

LED technology in a sophisticated form will illuminate elegant yet modern interiors.

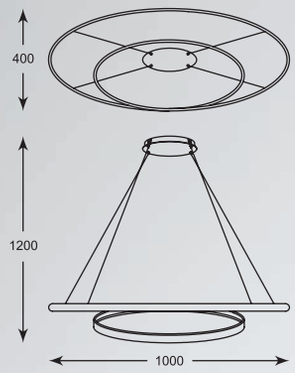

PERIA
Pendant lamp
MP57054-A
LED 40W 2000LM 3000K
metal chrome canopy,
chrome aluminium body,
acrylic shade

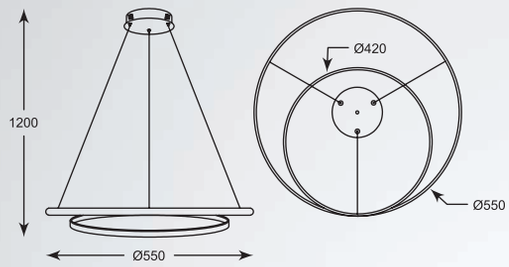

PERIA
Pendant lamp
MP57055-B
LED 30W 1500LM 3000K
metal chrome canopy,
chrome aluminium body,
acrylic shade

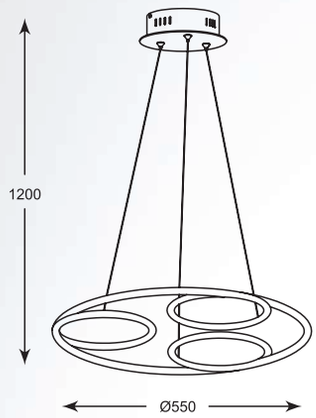

PERIA
Pendant lamp
MP82024-1A
LED 36W 2100LM 3000K
metal chrome canopy,
chrome aluminium body,
acrylic shade

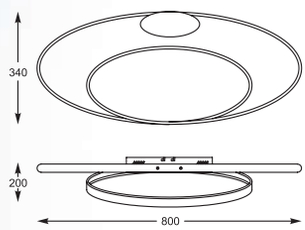

PERIA
Ceiling lamp
MX57054-B
LED 27W 1600LM 3000K
metal chrome canopy,
chrome aluminium body,
acrylic shade

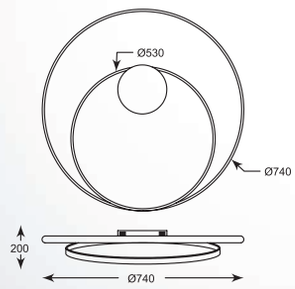

PERIA
Ceiling lamp
MX57055-A
LED 12W 700LM 3000K
metal chrome canopy,
chrome aluminium body,
acrylic shade

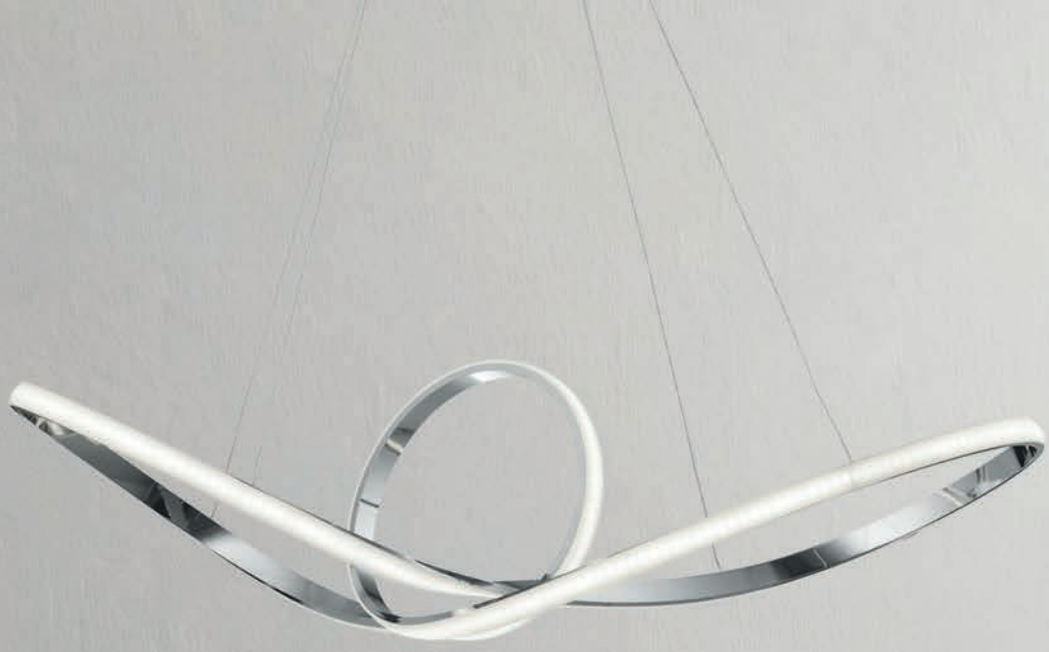

DARIO

Nowoczesny projekt oświetlenia cieszący oko swoją niespotykaną, fantazyjną formą.

A modern lighting design that pleases the eye with its unprecedented, fantasy form.

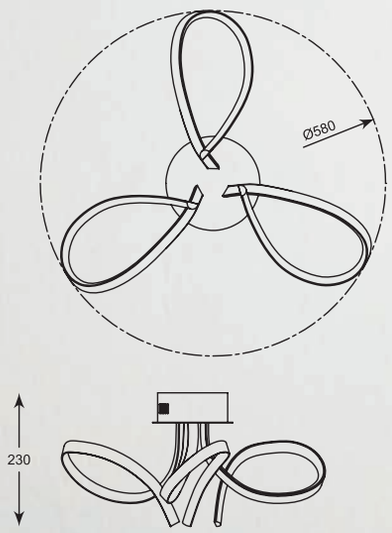

DARIO
Ceiling lamp
MX48006-3K
LED 24W 1000LM 3000K
aluminium base,
acrylic shade,
metal chrome canopy

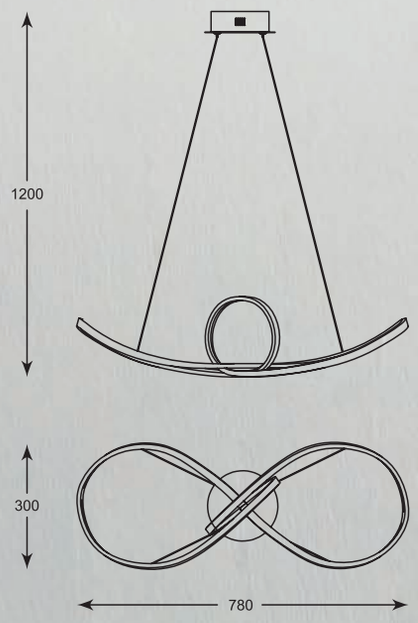

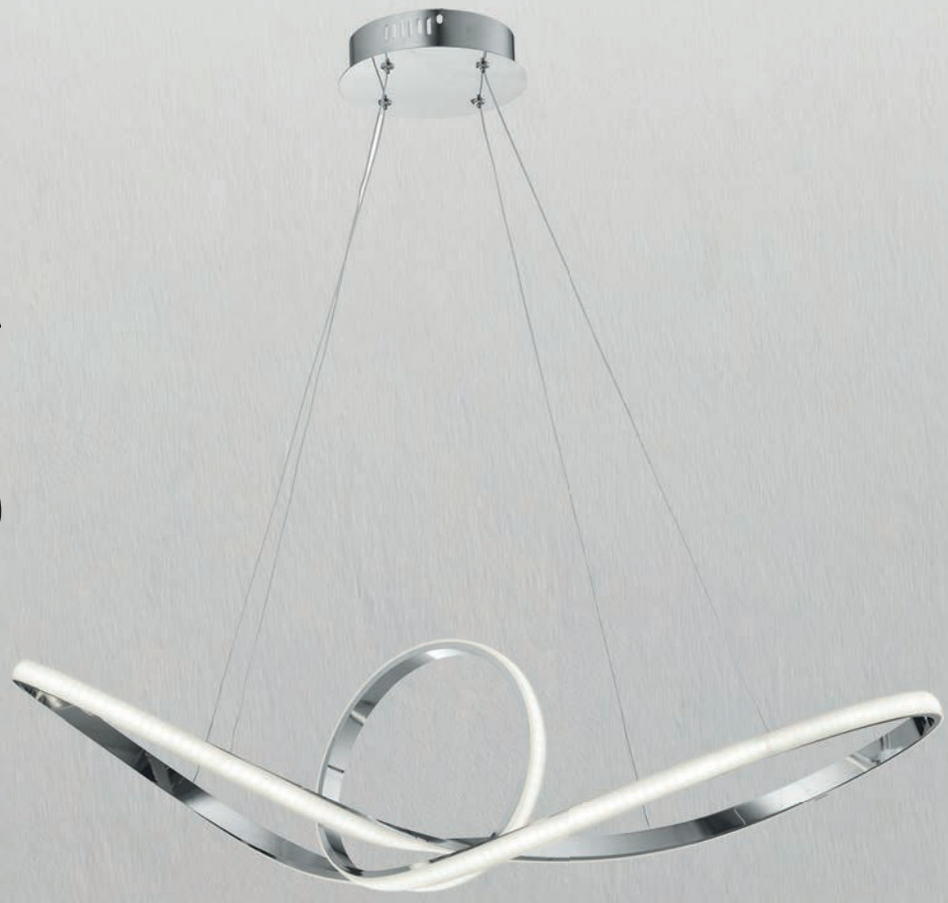

DARIO
Pendant lamp
MP48006-1H
LED 34W 1500LM 3000K
aluminium base,
acrylic shade,
metal chrome canopy

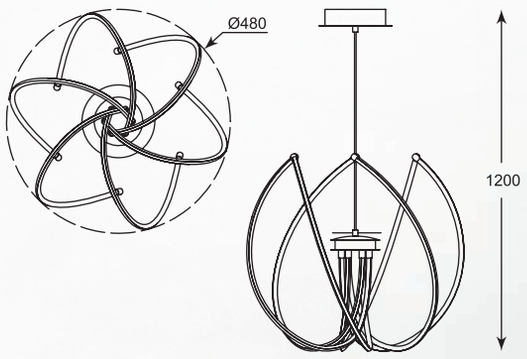

CLORIN

LAMPA WISZĄCA

Pendant lamp, L170402-6
1x58W LED 2320LM 3000K
metal chrome canopy
chrome aluminium body
acrylic shade

LED

MERLO

LAMPA SUFITOWA

Ceiling lamp, PL170826-6, 1xLED 68W 2998LM 3000K
metal chrome canopy, chrome aluminium body, acrylic shade

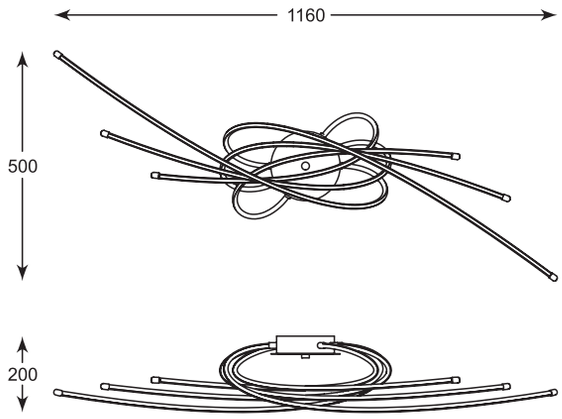

ZUMALINE

PONTA

LAMPA SUFITOWA

Niezwykle ciekawy projekt oświetlenia, który zachwyca swoją nietypową formą oraz nowoczesnym designem.

Ceiling lamp. An incredibly interesting lighting design, which delights with its unusual form and modern design.

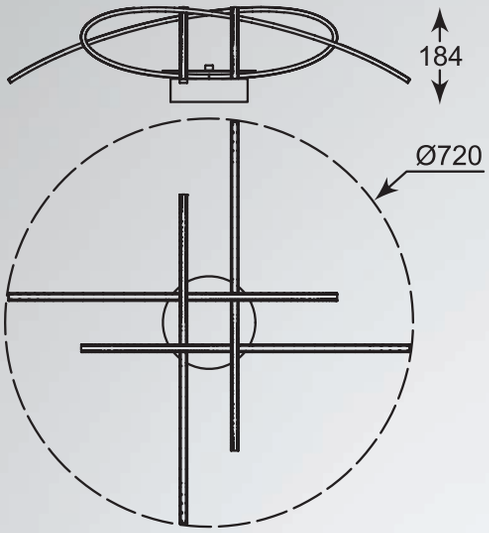

PONTA
Ceiling lamp
PL170855-4
1xLED MAX 42W 1680LM 3000K
metal chrome canopy,
chrome aluminium body,
acrylic shade

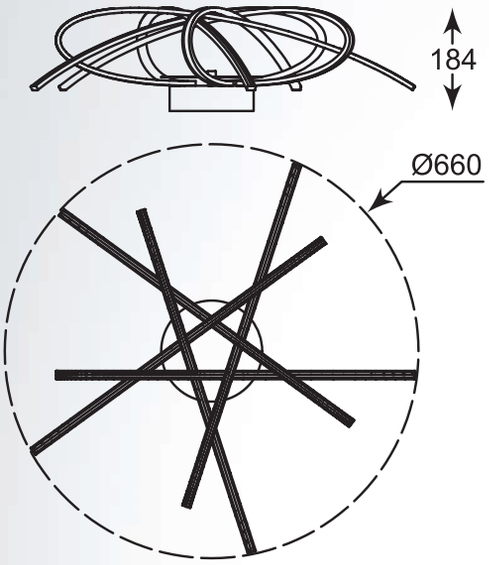

PONTA
Ceiling lamp
PL170855-5
1xLED MAX 50W 2000LM 3000K
metal chrome canopy,
chrome aluminium body,
acrylic shade

PISTA

LAMPA WISZĄCA

To nie tylko wspaniała oprawa oświetleniowa,
ale także ciekawy element dekoracyjny.

Pendant lamp. It is not only a great lighting fixture
but also an interesting decorative element.

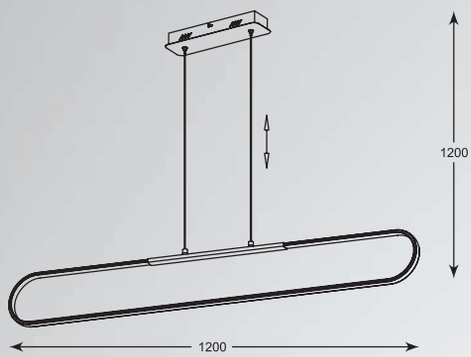

PISTA
Pendant lamp
L99833-1
1xLED 28W 1900 LM 3000K
acrylic silver body,
metal chrome canopy

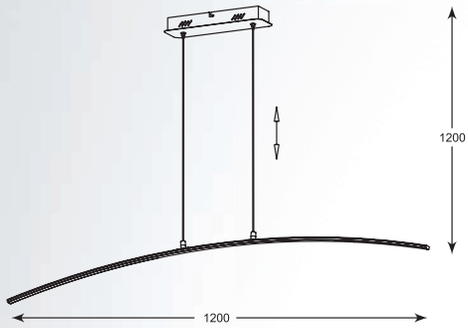

PISTA
Pendant lamp
L99832-1
1xLED 15W 800 LM 3000K
acrylic silver body,
metal chrome canopy

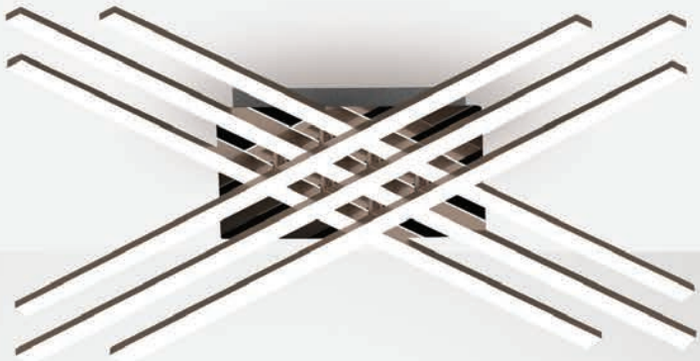

CROSS

LAMPA SUFITOWA

Ceiling lamp, PL99829-6
6xLED MAX 48W 3800LM 3000K
metal chrome canopy,
chrome aluminium base,
acrylic shade

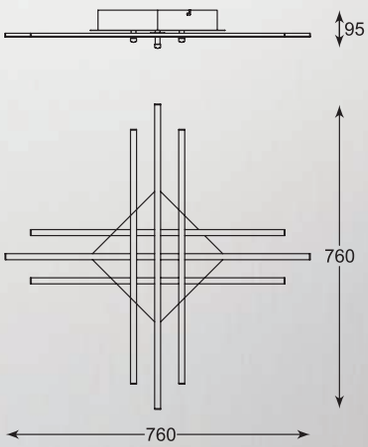

LED

MEDEL

LAMPA PODŁOGOWA

Floor lamp, SL489/CH, 1xLED 22W 2200LM 3000K
metal chrome base, chrome aluminium body, acrylic shade

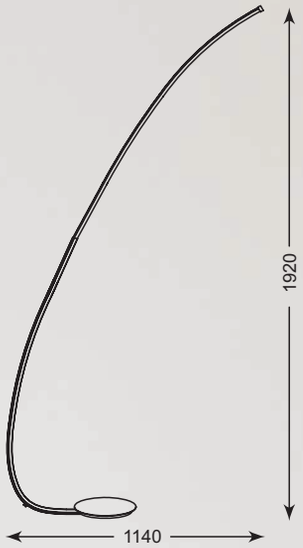

ZUMALINE

MAURO

Technologia LED zamknięta w minimalistycznych kształtach to idealne rozwiązanie dla nowoczesnego stylu wnętrza.

LED technology closed in minimalistic shapes is an perfect solution for modern interior design.

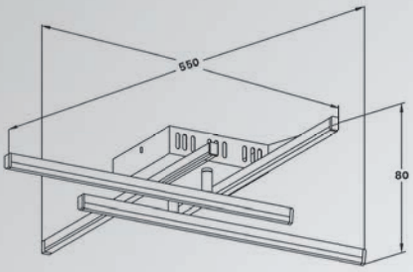

MAURO
Ceiling lamp
HP1419-C4
LED 19W 1144LM 3000K
metal chrome canopy,
chrome aluminium base,
acrylic shade

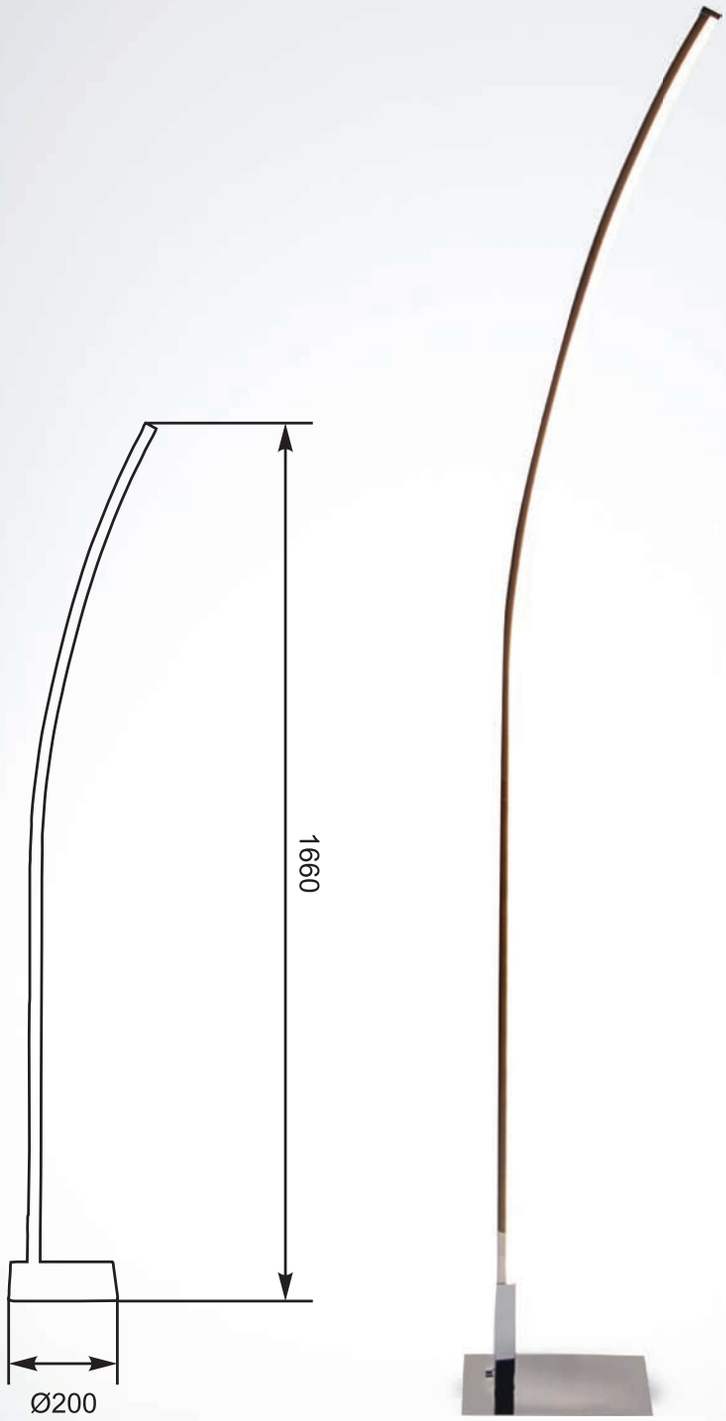

MAURO
floor lamp
HP1419-F
1xLED 15W 870LM 3000K
metal chrome base,
chrome aluminium body,
acrylic shade

LED

BELLE

Bogato zdobiona oprawa stworzona z dbałością o najmniejsze detale. Bądź bliżej natury dzięki roślinnej ornamentyce.

Pendant lamp. Richly ornamented luminaire created with attention to the smallest details. Get closer to nature with floral ornamentation.

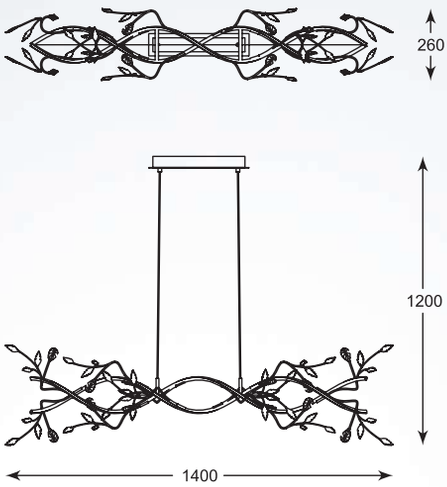

BELLE
Pendant lamp
PL170514-2
1xLED 30W 1200LM 3000K
metal chrome body and
canopy, crystals

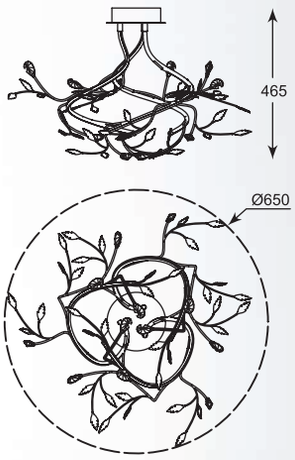

BELLE
Ceiling lamp
PL170511-3
1xLED 30W 1200LM 3000K
metal chrome body and
canopy, crystals

LUMINO

LAMPA SUFITOWA

Finezyjne kształty, bogate zdobienie
i chromowane wykończenie to główne atuty serii.
Idealna dekoracja do eleganckich wnętrz.

Fine shapes, rich decoration and chrome finish
are the main advantages of the series.
The perfect decoration for elegant interiors.

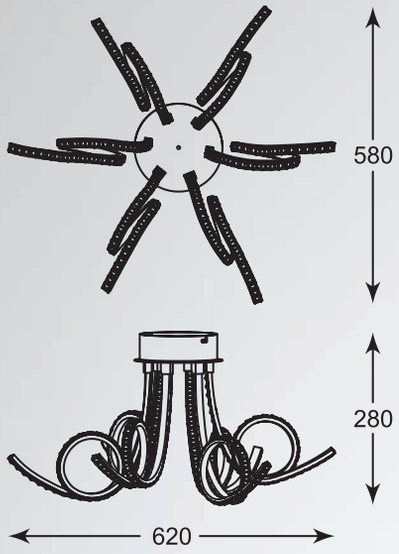

LUMINO
Ceiling lamp
PL99843A-6
1xLED 45W 1575LM 3000K
metal chrome body and canopy,
crystals

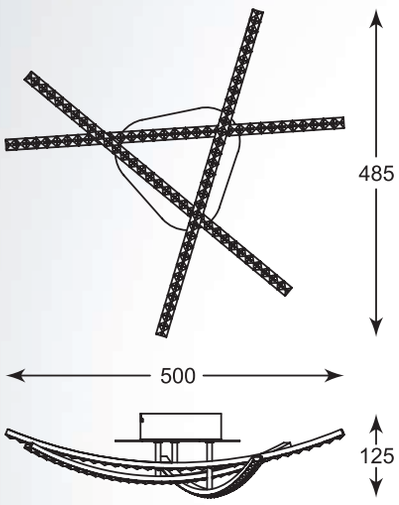

LUMINO
Ceiling lamp
PL99843C-3
1xLED 29W 1081LM 3000K
metal chrome body and canopy,
crystals

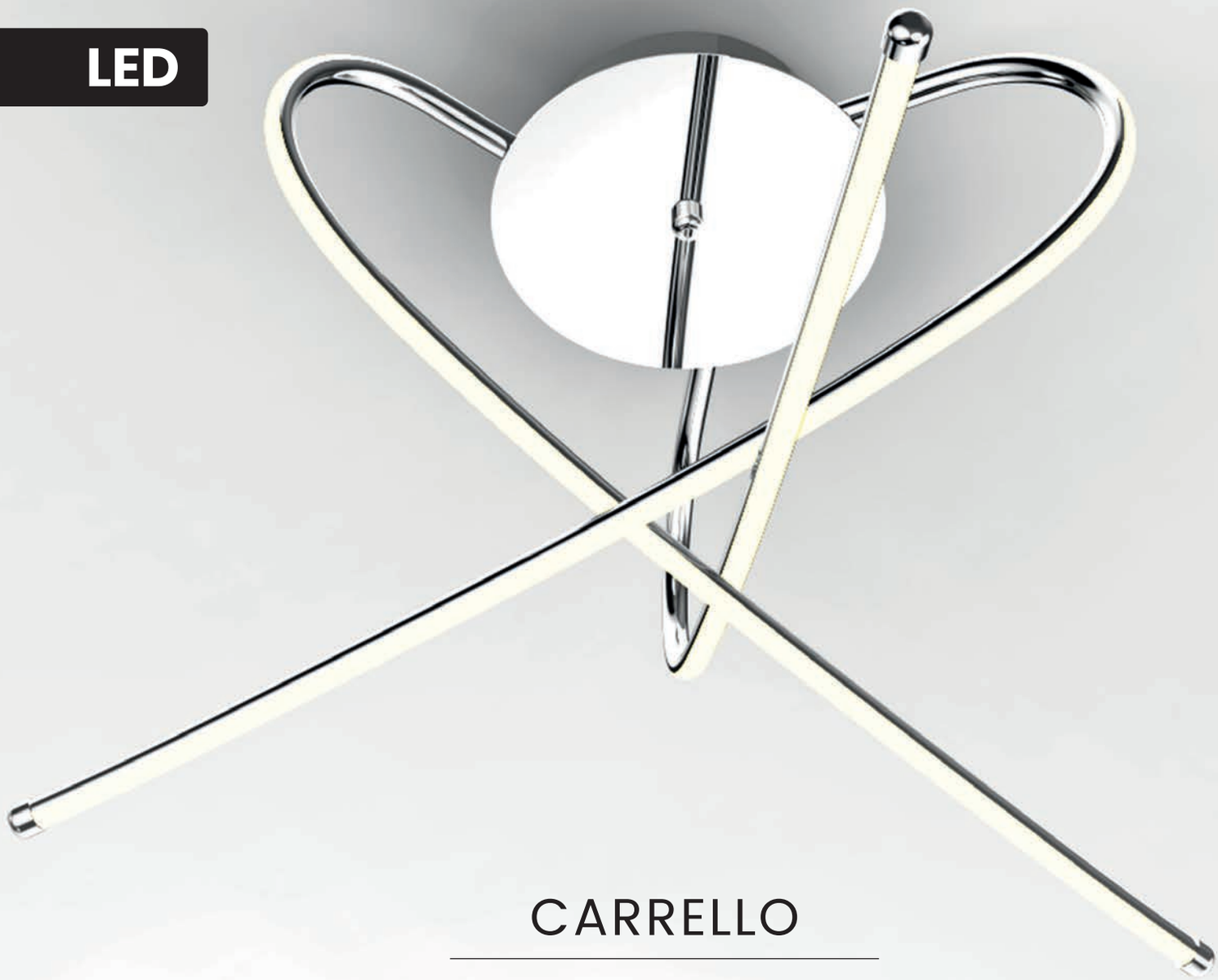

CARRELLO

LAMPA SUFITOWA

Ceiling lamp
PL1100014-3
3xLED MAX 27W 2250LM 3000K
metal chrome canopy
chrome aluminium body
acrylic shade

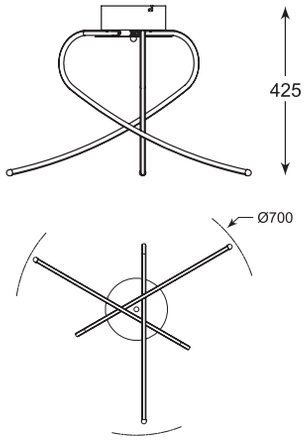

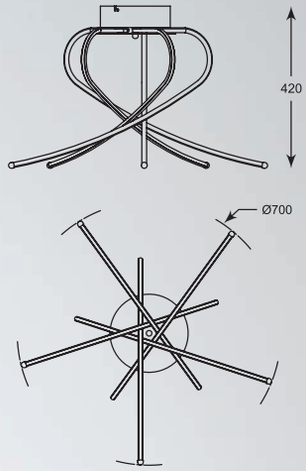

CARRELLO
Ceiling lamp
PL1100014-5
5xLED MAX 45W 2250LM 3000K
metal chrome canopy
chrome aluminium body
acrylic shade

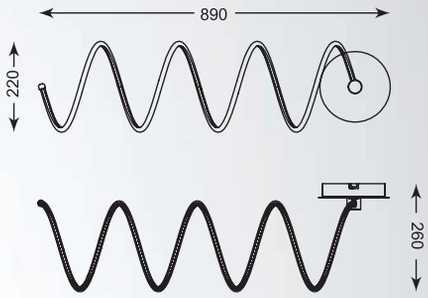

CARRELLO
Ceiling lamp
00312
1xLED 28W 1260LM 3000K
metal chrome canopy
black aluminium body
acrylic shade

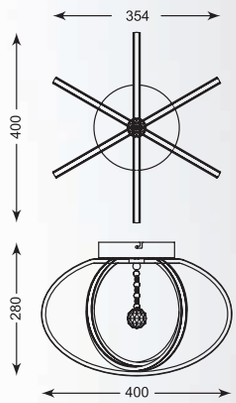

CARRELLO
Ceiling lamp
0044
1xLED 26W 1000LM 3000K
metal chrome canopy
black aluminium body
acrylic shade

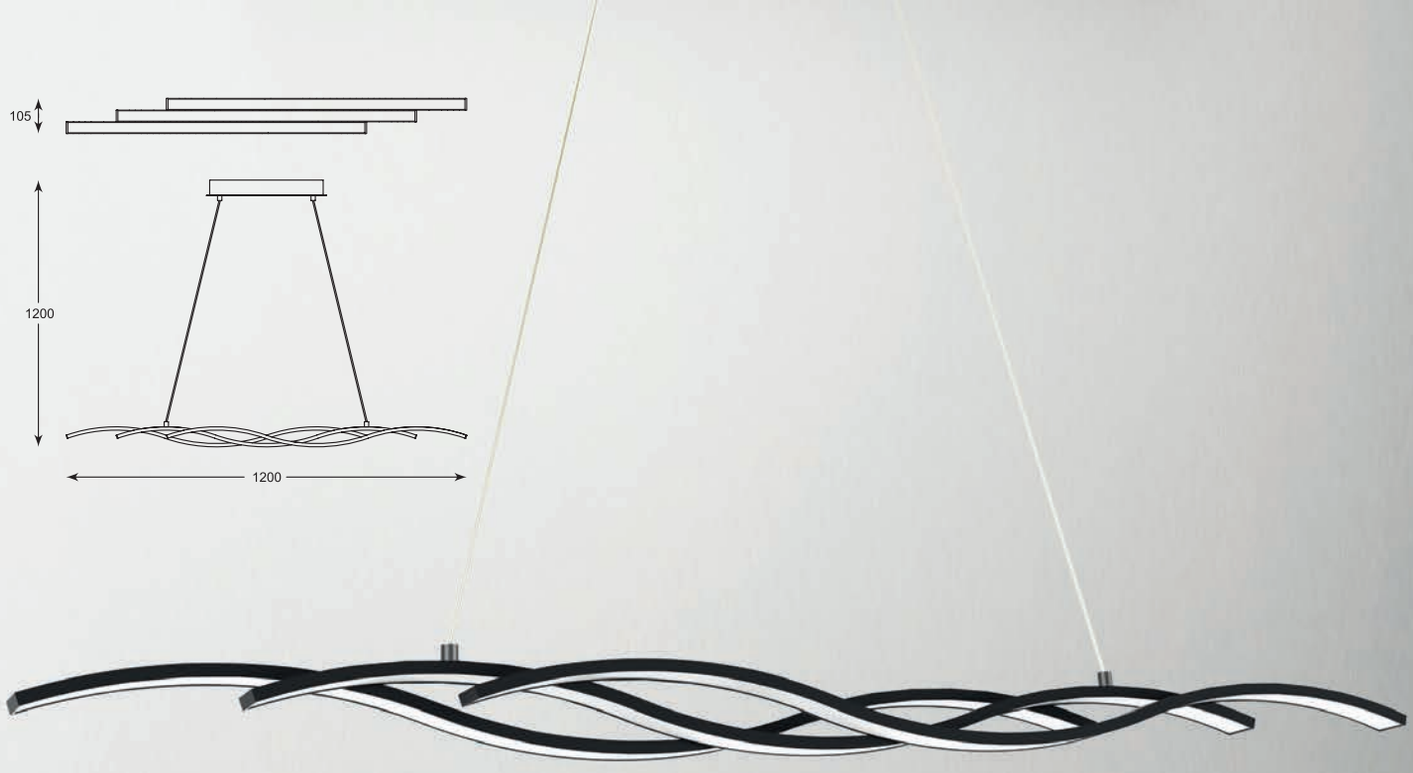

LED

RESINA

LAMPA WISZĄCA

Pendant lamp, L170221-3, 1x53W LED 2200LM 3000K
black metal canopy, black metal body and base, acrylic shade

LED

TREN

LAMPA PODŁOGOWA

Floor lamp, MF48060-1, LED 30W 1500 LM 3000K
body and base made of black metal, acrylic cover

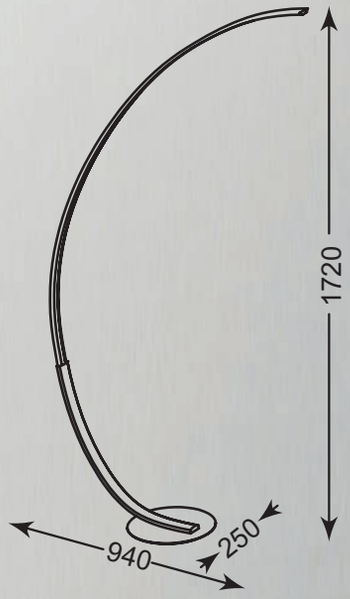

ZUMALINE

CIRCLE

Model do nowoczesnych wnętrz, gdzie łamanie konwencji oraz innowacyjność formy to podstawa.

Model for modern interiors, where breaking conventions and innovation of form is the essence.

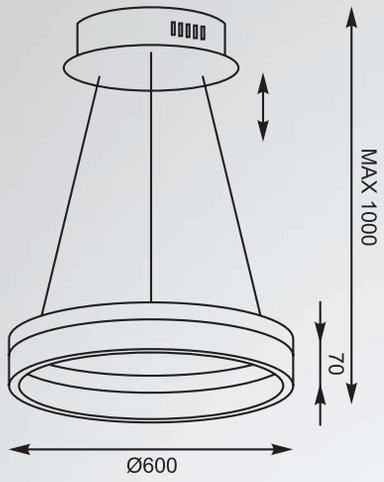

CIRCLE
Pendant lamp
L-CD-04
LED 40W 3500 LM, 3000K
white metal aluminium
with acrylic shade,
chrome canopy

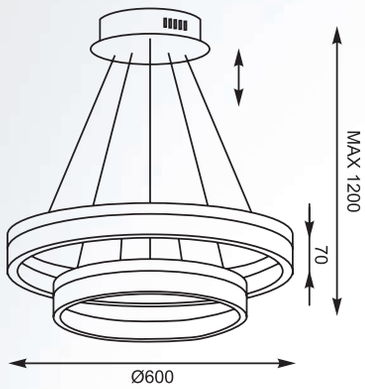

CIRCLE
Pendant lamp
L-CD-01
LED 70W 5600 LM 3000K
white metal aluminium
with acrylic shade,
chrome canopy

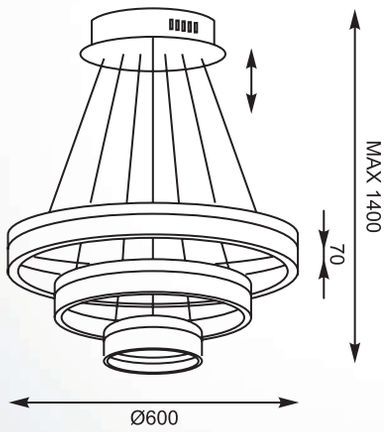

CIRCLE
Pendant lamp
L-CD-03
LED 80W 5900 LM 3000K
white metal aluminium
with acrylic shade,
chrome canopy

CIRCLE

LAMPA WISZĄCA

Pendant lamp, L-CD-03-BL
LED SMD 80W 5900LM 3000K
black metal aluminium shade
with acrylic, black canopy

LED

FLAT CIRCLE

LAMPA SUFITOWA

Ceiling lamp L-XX-10, LED 30W
2020 LM 3000K
white metal aluminium with
acrylic shade

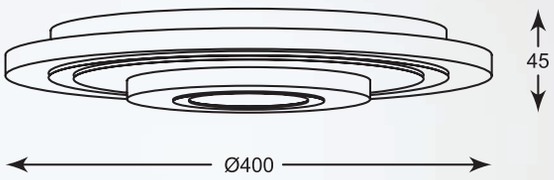

ZUMALINE

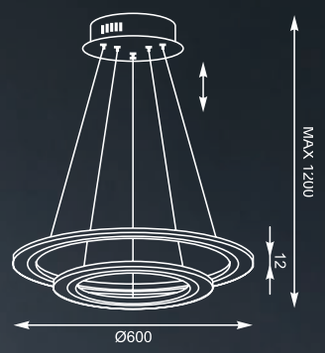

FLAT CIRCLE

LAMPA WISZĄCA

Pendant lamp, L-CD-660-BL,
LED SMD 60W 5500LM 3000K
black metal aluminium shade
with acrylic, black canopy

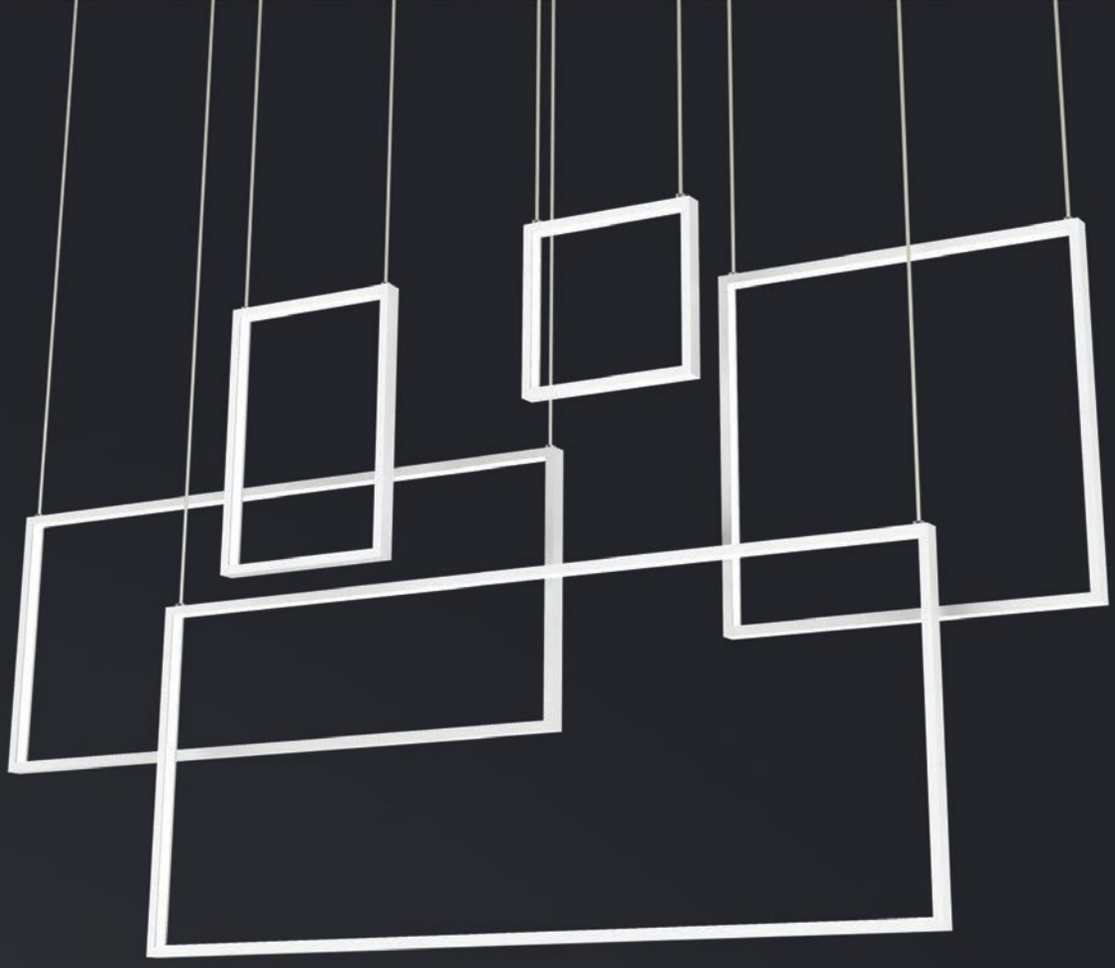

LED

RECTAN

LAMPA WISZĄCA

Pendant lamp, L171209-5, LED 80W 3200LM 3000K
metal chrome canopy, white body, acrylic shade

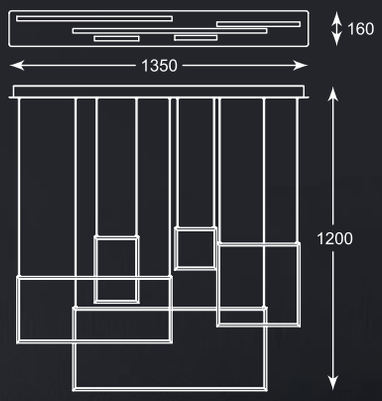

ZUMALINE

DORIS

LAMPA WISZĄCA

Uniwersalna kolorystyka lampy i nowoczesna bryła kloszy.

Pendant lamp. Universal colours of the lamp and modern shape of the lampshades.

DORIS
Pendant lamp
MD1703-1
1xLED MAX 5W, 470 LM 3000K
metal chrome canopy
and shade, shade PC

DORIS
Pendant lamp
MD1703-3B
3xLED MAX 5W, 1410 LM 3000K
metal chrome canopy
and shade, shade PC

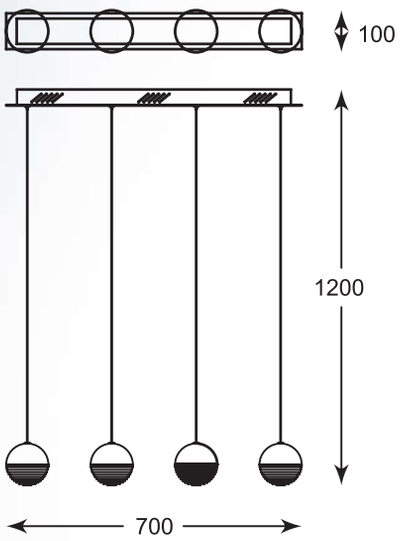

DORIS
Pendant lamp
MD1703-4A
4xLED MAX 5W 1880LM 3000K
metal chrome canopy
and shade, shade PC

ENZO

Nowoczesny projekt oświetlenia, który niebanalnym designem oraz minimalistyczną formą zachwyci swoim kunsztem.

Modern lighting design, which by its original construction and minimalist form will delight you with its craftsmanship.

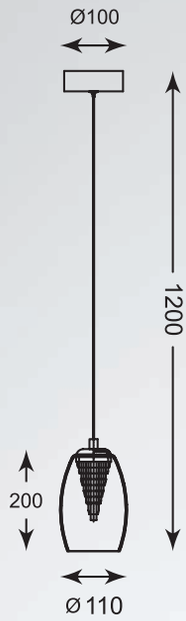

ENZO
Pendant lamp
MD1622-1
1xLED MAX 5W, 470 LM 3000 K
chrome canopy,
transparent glass shade

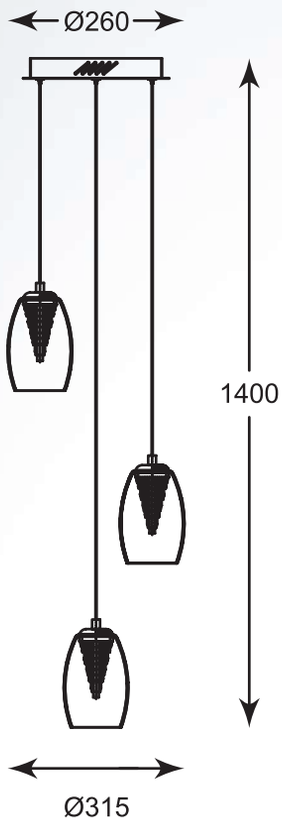

ENZO
Pendant lamp
MD1622-3B
3xLED MAX 5W, 1410 LM 3000 K
chrome canopy,
transparent glass shade

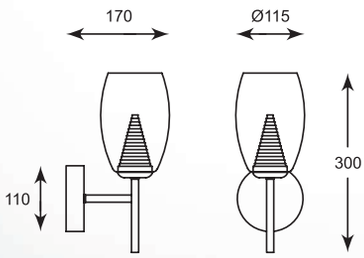

ENZO
Wall lamp
MB1622-1
1xLED MAX 5W, 470 LM 3000 K
chrome canopy,
transparent glass shade

SCROLL
Pendant lamp
L171122C
1xLED 60W 3540LM 3000K
metal chrome canopy
chrome aluminium body
acrylic shade

SCROLL

Ciekawy projekt, który dzięki swojej niebanalnej formie będzie doskonałym dodatkiem do nowoczesnych aranżacji.

An interesting project, which due to its original form will be an excellent addition to modern arrangements.

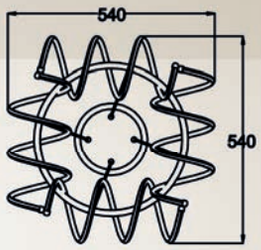

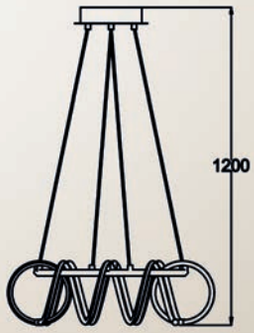

SCROLL
Pendant lamp
L171122B
1xLED 60W 3540LM 3000K
metal black canopy
black aluminium body
acrylic shade

ZUMALINE

LED

LINA

Pendant lamp
L180315C
1xLED MAX 13W 750LM 3000K
1xE14 MAX 40W
metal chrome canopy
chrome aluminium body
acrylic shade

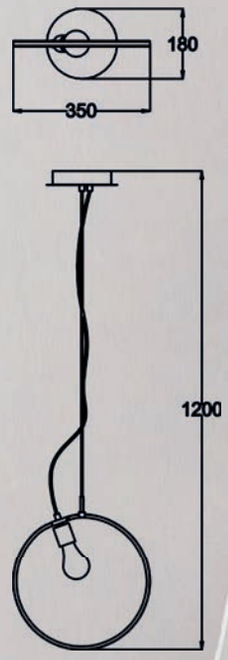

LED

ALTA

LAMPA SUFITOWA

RLX96700-1, LED 21W 1200LM 3000-6500K
Biały klosz z tworzywa. Transparentny, gwieździsty wzór. Pilot do zmiany barwy i natężenia światła.

Ceiling lamp RLX96700-1, LED 21W 1200LM 3000-6500K plastic white shade with transparent starry dots. Remote control, dimmable colour from warm white to cold white.

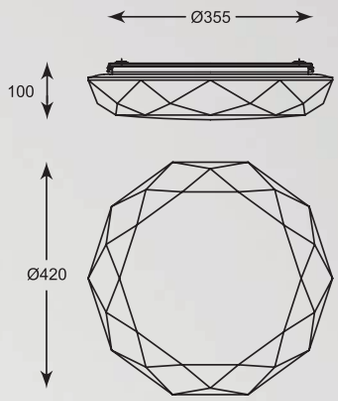

ZUMALINE

ADEM
Ceiling lamp
E9371-37-LED-GR (gray)
1xLED 18W, 800LM 3000K
gray fabric shade, white
plastic cover

ADEM
Ceiling lamp
E9371-37-LED-BL (black)
1xLED 18W, 800LM 3000K
black fabric shade, white
plastic cover

LED

ADEM

LAMPA SUFITOWA

Pełna szyku i elegancji, nowoczesna forma oświetlenia.
Technologia LED emitująca światło o ciepłej białej barwie (3000K).

Ceiling lamp. Full of chic and elegance, modern form
of lighting. LED technology emitting warm, white light (3000K).

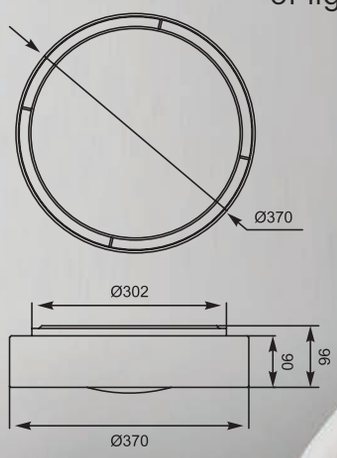

LED

ASCONA

Pendant lamp
L180301-8C
8xLED MAX 65W 3750LM 3000K
metal chrome canopy
chrome aluminium body
acrylic shade

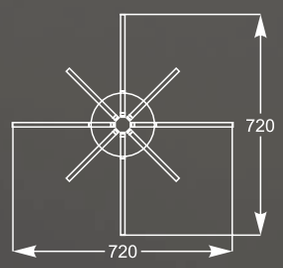

ZUMALINE

BELLIS

Klosz wykonany został w taki sposób, by zapewnić jak największy rozsył światła.

The shade has been designed to provide maximum light distribution.

BELLIS
Ceiling lamp
12080021
1xLED MAX 18W 1050LM 4000K
chrome aluminium body
acrylic shade

BELLIS
Ceiling lamp
12080022
1xLED MAX 24W 1400LM 4000K
chrome aluminium body
acrylic shade

SIERRA

Projekt o prostej geometrycznej formie i stonowanej kolorystyce pasujący do nowoczesnych i minimalistycznych wnętrz.

A project with a simple geometric form and subdued colours that perfectly matches modern and minimalistic interiors.

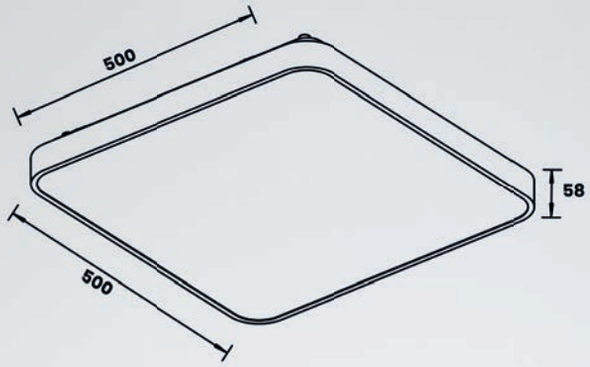

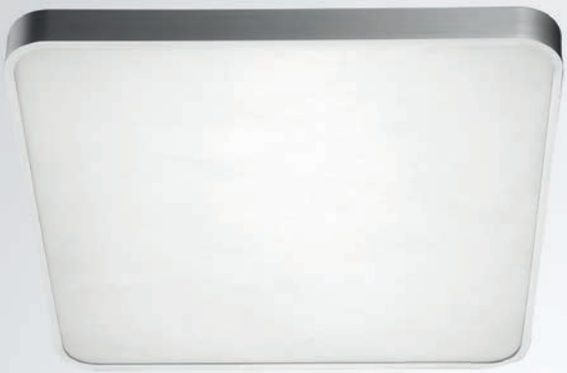

SIERRA
Ceiling lamp
12100005-SL
1xLED MAX 60W 3900LM 4000K
chrome brushed aluminium body
acrylic shade

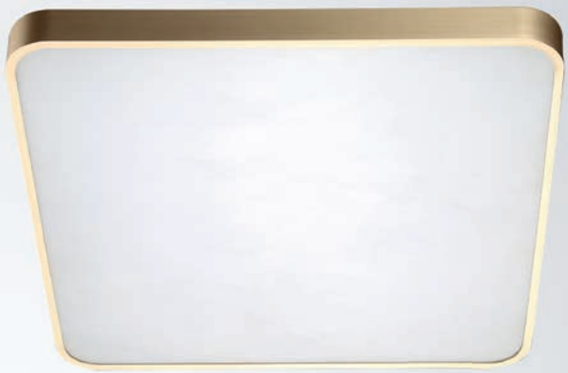

SIERRA
Ceiling lamp
12100005-GD
1xLED MAX 60W 3600LM 4000K
gold brushed aluminium body
acrylic shade

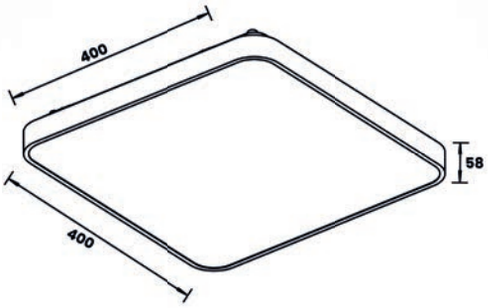

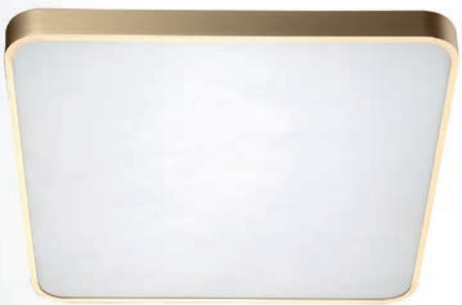

SIERRA
Ceiling lamp
12100006-GD
1xLED MAX 40W 2400LM 4000K
gold brushed aluminium body
acrylic shade

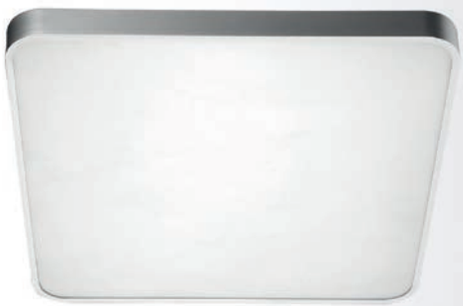

SIERRA
Ceiling lamp
12100006-SL
1xLED MAX 40W 2600LM 4000K
chrome brushed aluminium body
acrylic shade

LEXI

Funkcjonalna ozdoba wnętrza bazująca na nowoczesnej technologii LED.
Doskonała do umieszczenia nad stołem w jadalni, bądź wyspą kuchenną.

Functional interior decoration based on modern LED technology.
It is perfect for placing above the dining table or kitchen island.

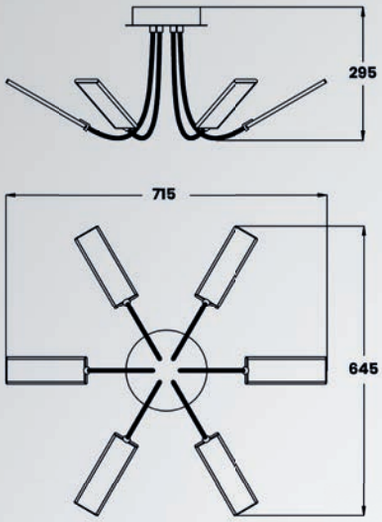

LEXI
Ceiling lamp
PL180109-6C
6xLED MAX 30W 2030LM 3000K
metal chrome canopy
chrome aluminium body
acrylic shade

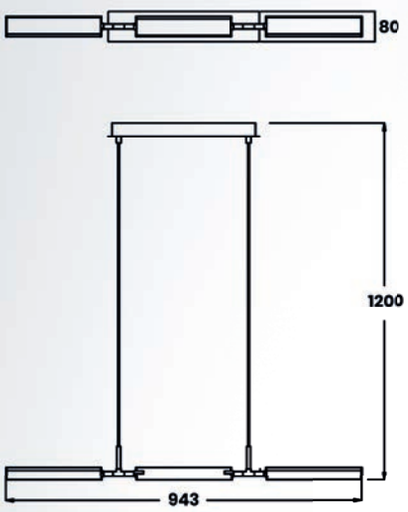

LEXI
Pendant lamp
L180109-3C
3xLED MAX 24W 1400LM 3000K
metal chrome canopy
chrome aluminium body
acrylic shade

PLATT

Nietypowe wykończenia stelaża fantastycznie zgrywają się z ozdobnymi elementami i sprawiają, że głównym przeznaczeniem tego typu oświetlenia jest salon lub przestrzeń komercyjna.

Unusual finishes of the frame perfectly match the decorative elements that make the main purpose is the living room or commercial space.

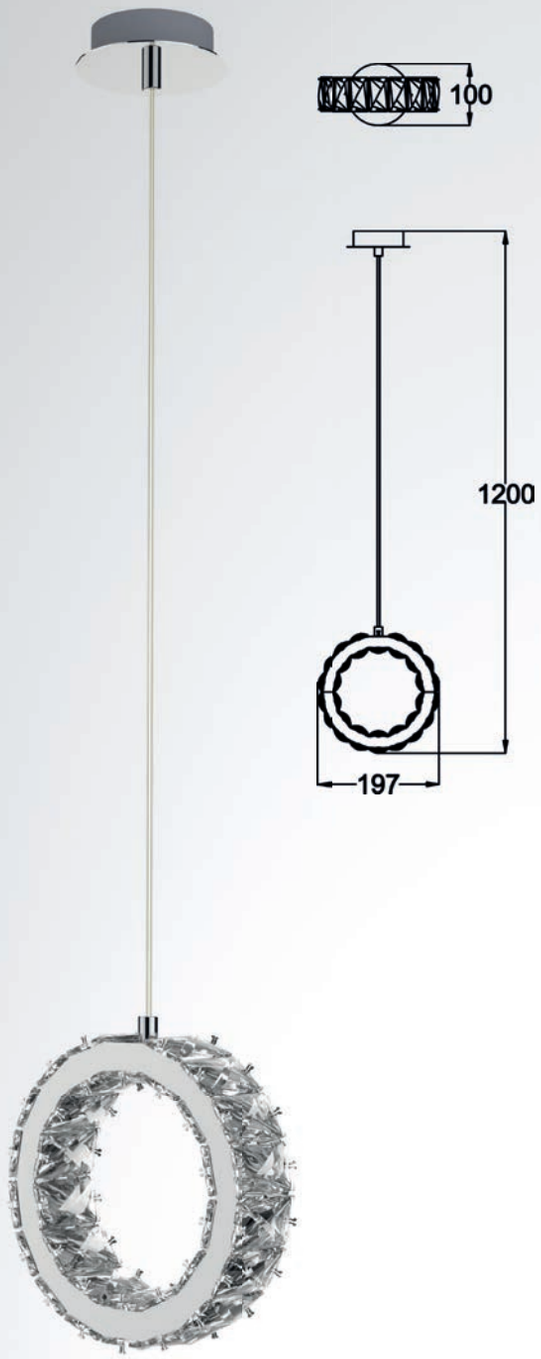

PLATT
Pendant lamp
PL180407-1
1xLED MAX 10W 520LM 3000K
metal chrome body, clear crystal glass

PLATT
Pendant lamp
PL180407-3
3xLED MAX 30W 1560LM 3000K
metal chrome body, clear crystal glass

SICA

Ujmuje prostotą wykonania, chromowanym wykończeniem i eleganckimi elementami.

It charms with its simplicity of design, chrome finish and elegant elements.

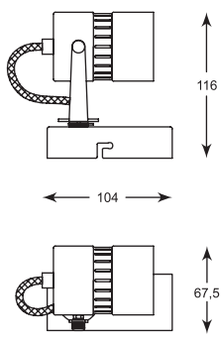

SICA
Spot
CK99892-1
1xGU10 MAX 40W
metal chrome body,
white cracked glass shade

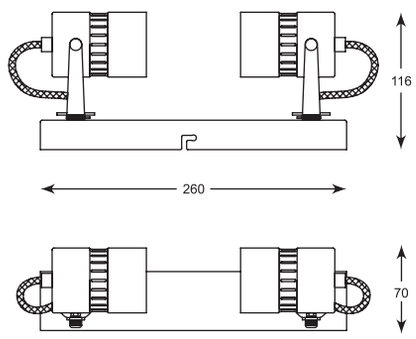

SICA
Spot
CK99892-2
2xGU10 MAX 40W
metal chrome body,
white cracked glass shade

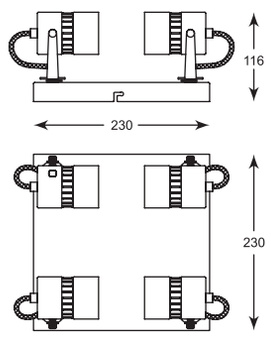

SICA
Spot
CK99892-4
4xGU10 MAX 40W
metal chrome body,
white cracked glass shade

RAO

Minimalistyczne reflektorki wspaniale zaprezentują się w salonie, gdzie stworzą perfekcyjną iluminację.

Minimalistic spotlights will look great in the living room, where they will create a perfect illumination.

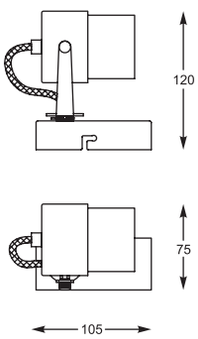

RAO
Spot
CK99893-1
1xGU10 MAX 40W
chrome, black metal

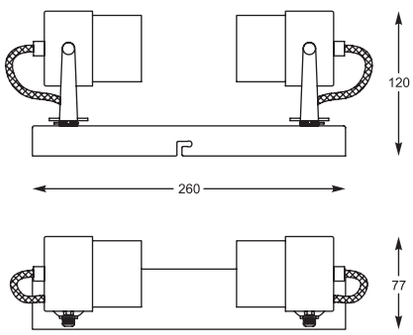

RAO
Spot
CK99893-2
2xGU10 MAX 40W
chrome, black metal

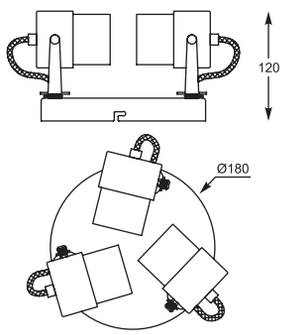

RAO
Spot
CK99893-3
3xGU10 MAX 40W
chrome, black metal

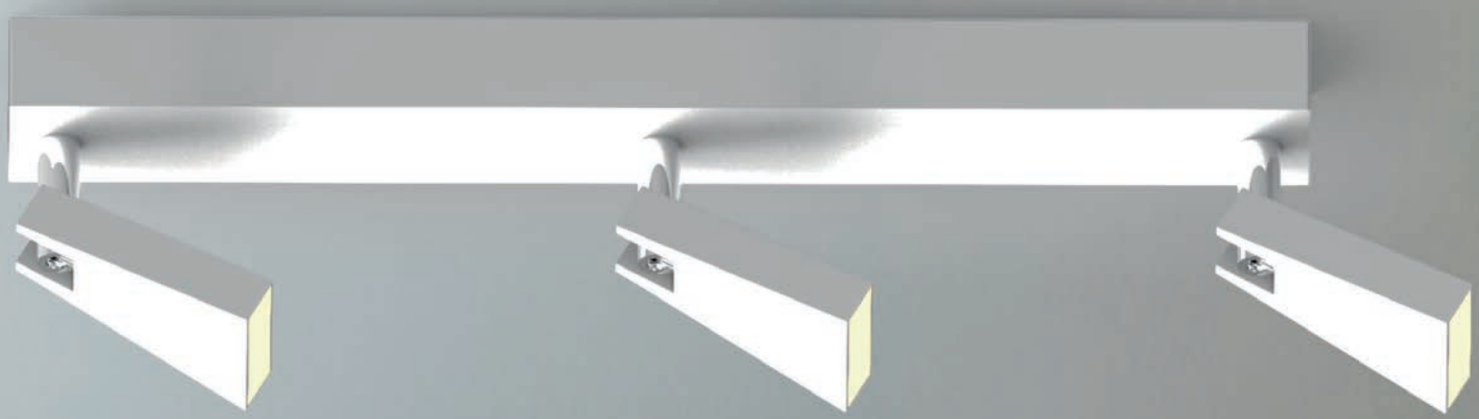

SPAZIO

Uniwersalność kolorystyczna pozwala na wszechstronne zastosowanie w różnych aranżacjach.

Multi-purpose colours allow for universal use in various arrangements.

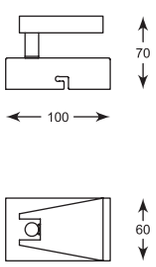

SPAZIO
Spot
CK99603A-1
1xLED 5W 400 LM 3000K
white metal

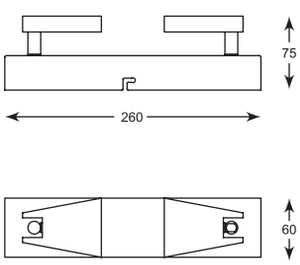

SPAZIO
Spot
CK99603A-2
2xLED 5W 800 LM 3000K
white metal

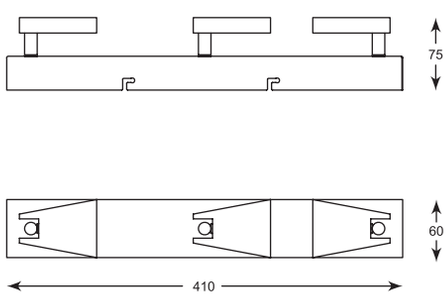

SPAZIO
Spot
CK99603A-3
3xLED 5W 1200 LM 3000K
white metal

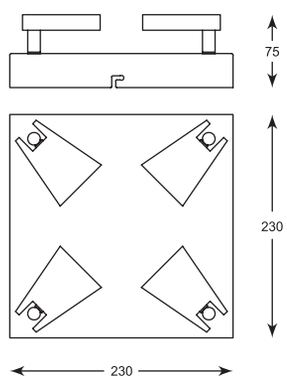

SPAZIO
Spot
CK99603A-4
4xLED 5W 1600 LM 3000K
white metal

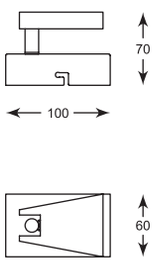

SPAZIO
Spot
CK99603A-1B
1xLED 5W 400 LM 3000K
black metal

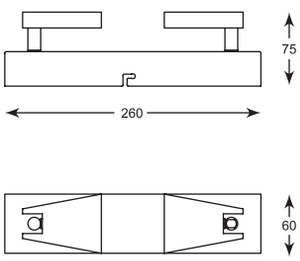

SPAZIO
Spot
CK99603A-2B
2xLED 5W 800 LM 3000K
black metal

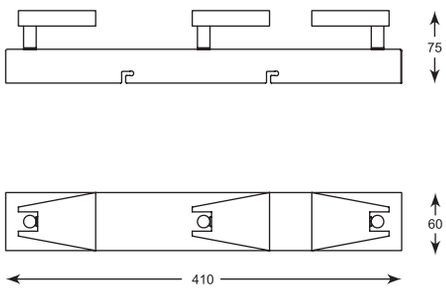

SPAZIO
Spot
CK99603A-3B
3xLED 5W 1200 LM 3000K
black metal

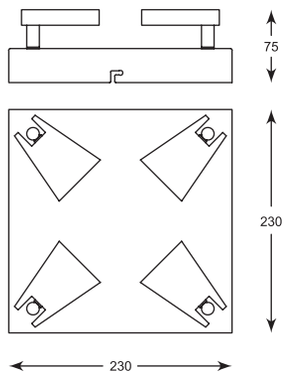

SPAZIO
Spot
CK99603A-4B
4xLED 5W 1600 LM 3000K
black metal

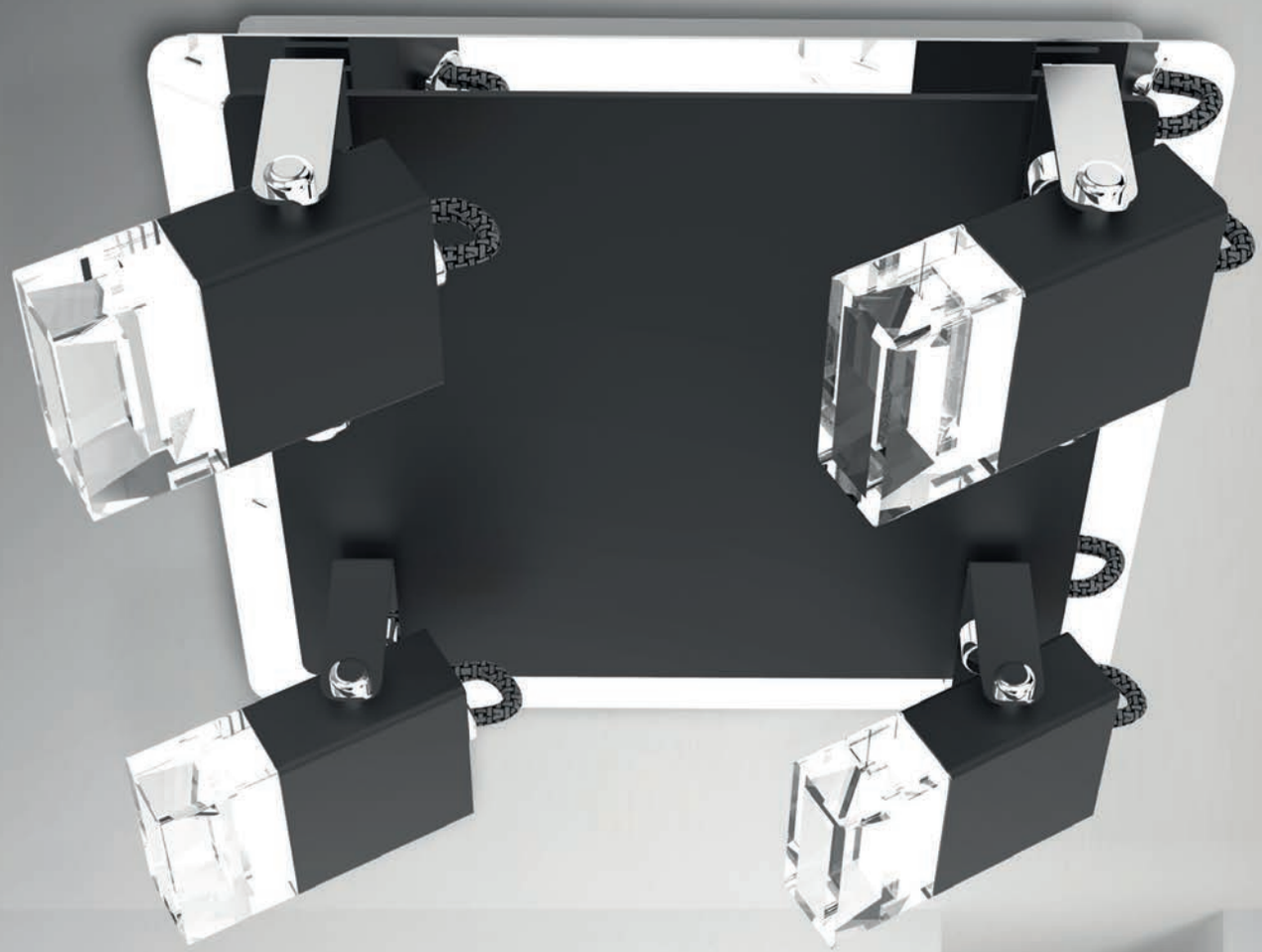

TOLO

Ruchome elementy zagwarantują dostosowanie oświetlenia do własnych potrzeb.

Movable elements will ensure that the lighting is adapted to your needs.

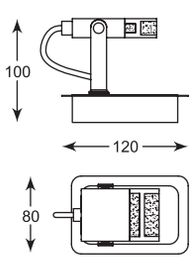

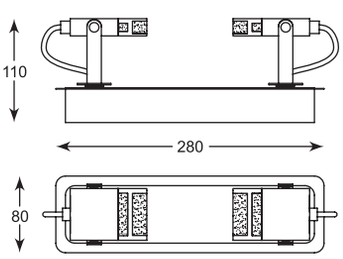

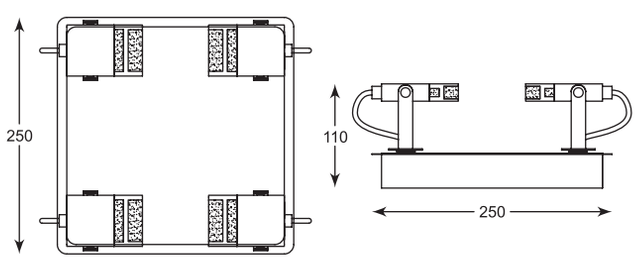

TOLO
Spot
CK161213-1
1x5W LED 400 LM 3000K
metal chrome, black metal, PC

TOLO
Spot
CK161213-2
2x5W LED 800 LM 3000K
metal chrome, black metal, PC

TOLO
Spot
CK161213-4
4x5W LED 1600 LM 3000K
metal chrome, black metal, PC

LED

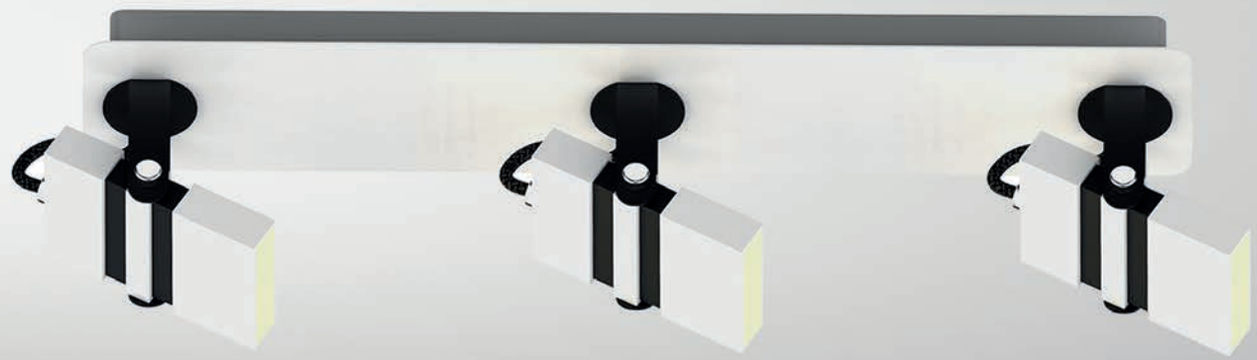

COSTA

Oryginalne geometryczne oprawy zadowolą zwolenników najnowszych trendów.

Original geometric frames will satisfy the lovers of the latest trends.

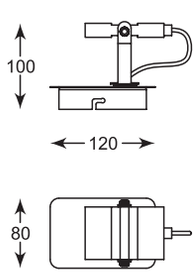

COSTA
Spot
CK170208-1
1x5W LED 400 LM 3000K
white and black metal, PC

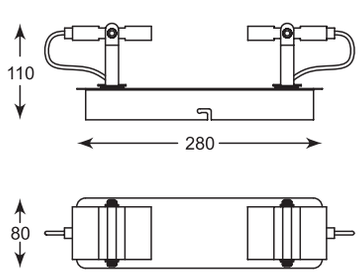

COSTA
Spot
CK170208-2
2x5W LED 800 LM 3000K
white and black metal, PC

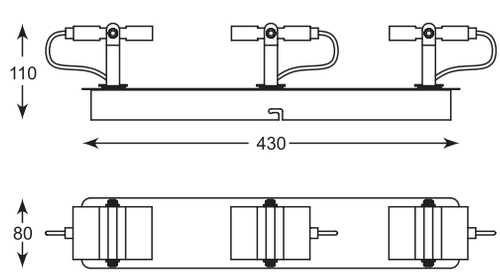

COSTA
Spot
CK170208-3
3x5W LED 1200 LM 3000K
white and black metal, PC

MOLI

W zależności od indywidualnych potrzeb można zastosować jedną lub kilka lamp z serii, tworząc w ten sposób kompleksowe oświetlenie.

Depending on individual needs, one or several lamps from the series can be used, creating in this way a comprehensive lighting system.

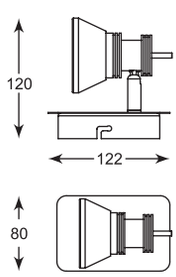

MOLI
Spot
CK170205-1
1x5W LED 400 LM 3000K
iron stainless alumium

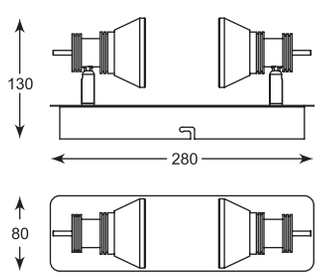

MOLI
Spot
CK170205-2
2x5W LED 800 LM 3000K
iron stainless alumium

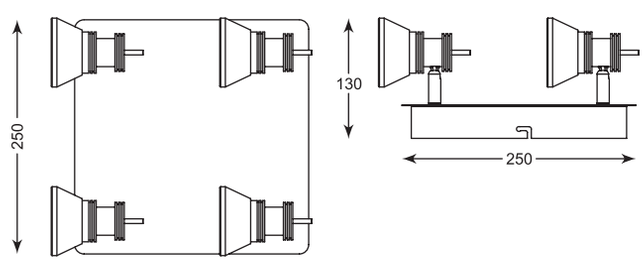

MOLI
Spot
CK170205-4
4x5W LED 1600 LM 3000K
iron stainless alumium

ALEX

Charakteryzuje się nowoczesną i designerską formą, a stonowana kolorystyka nadaje lampom wyjątkowo eleganckiego wyglądu.

It is a modern and stylish form. Subdued colours give the lamps an ultra-elegant look.

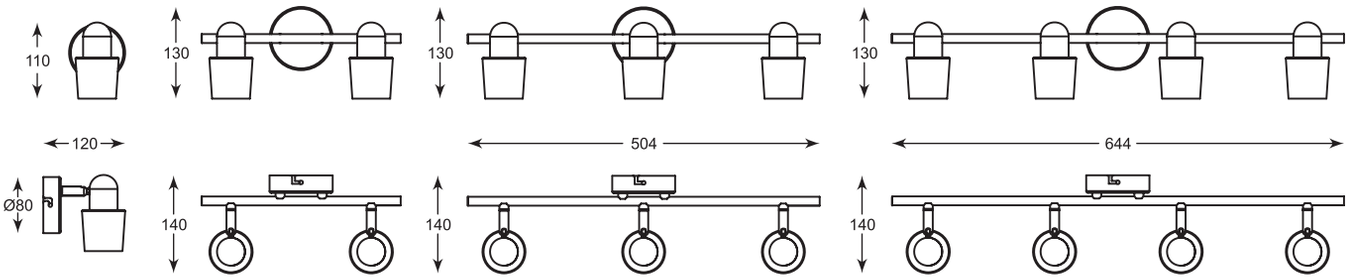

ALEX
Spot
CK99515-1W
1xGU10 MAX 40W
white metal,
chrome metal

ALEX
Spot
TK99515-2W
2xGU10 MAX 40W
white metal,
chrome metal

ALEX
Spot
TK99515-3W
3xGU10 MAX 40W
white metal,
chrome metal

ALEX
Spot
TK99515-4W
4xGU10 MAX 40W
white metal,
chrome metal

RAVA

Charakteryzuje się uniwersalnym, białym kolorem, dzięki czemu pasuje do wnętrz w skandynawskiej stylistyce.

It is characterized by a universal, white color, which makes it suitable for interiors in Scandinavian style.

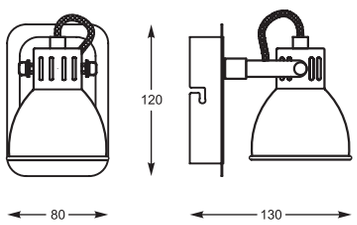

RAVA
Spot
CK100008-1
1xGU10 MAX 40W
white and chrome metal

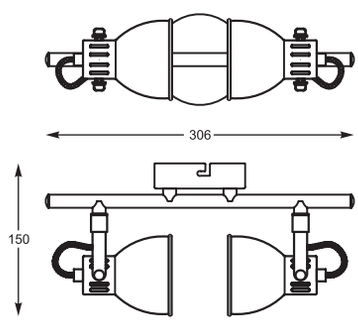

RAVA
Spot
TK100008-2
2xGU10 MAX 40W
white and chrome metal

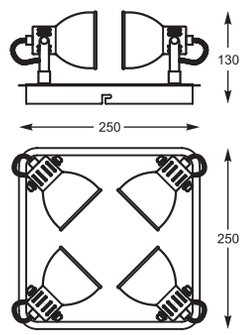

RAVA
Spot
CK100008-4
4xGU10 MAX 40W
white and chrome metal

REDON

W tej klasycznej formie jednolita czerń została podkreślona złotym wykończeniem wnętrza klosza oraz białymi detalami.

In this classic style, the uniform black was accentuated by the golden finish of the lamp shade interior and white details.

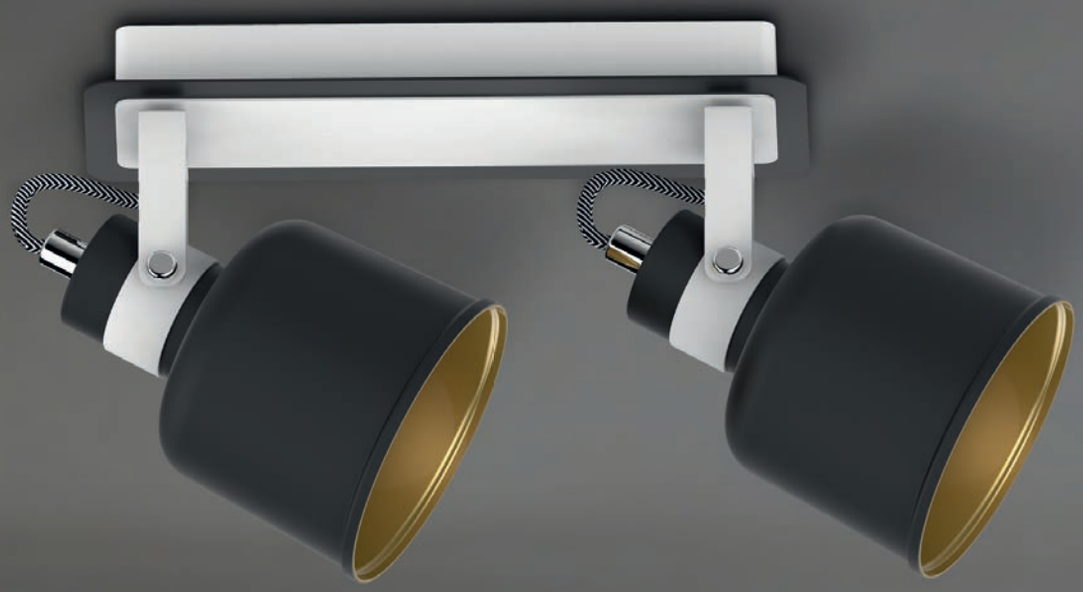

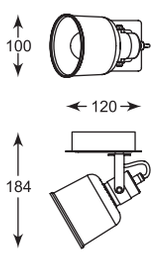

REDON
Spot
CK170901-1
1xE14 MAX 40W
white black iron stainless steel

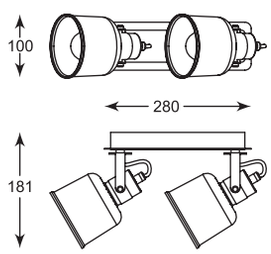

REDON
Spot
CK170901-2
2xE14 MAX 40W
white black iron stainless steel

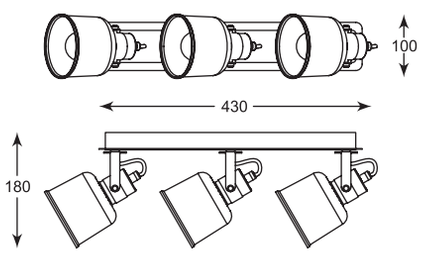

REDON
Spot
CK170901-3
3xE14 MAX 40W
white black iron stainless steel

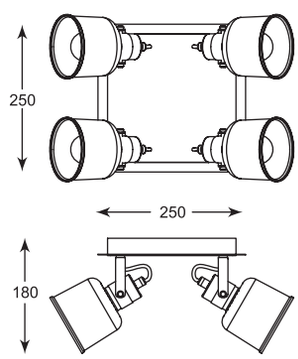

REDON
Spot
CK170901-4
4xE14 MAX 40W
white black iron stainless steel

ELIA

Elegancka forma i kryształowy design pozwala zastosować lampy w rozmaitych pomieszczeniach i aranżacjach.

Elegant form and crystal design allows to use lamps in various rooms and arrangements.

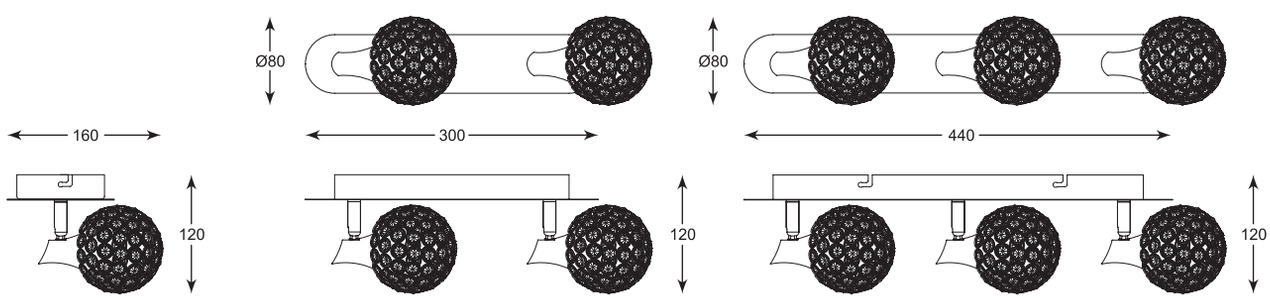

ELIA
Spot
CK8038-1
1xG9 MAX 40W
iron stainless steel crystal

ELIA
Spot
CK8038-2
2xG9 MAX 40W
iron stainless steel crystal

ELIA
Spot
CK8038-3
3xG9 MAX 40W
iron stainless steel crystal

LED

TOLEDO

Ekskluzywna forma kloszy wykonanych z kryształu sprawdzi się jako przyciągający uwagę element dekoracyjny.

Exclusive form of the lampshades made of crystal will be perfect as an eye-catching decorative element.

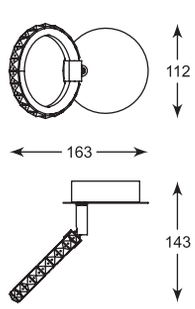

TOLEDO
Spot
CK170815-1
1x5W LED 250 LM 3000K
chrome iron stainless steel
aluminium crystal

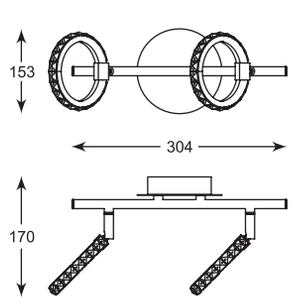

TOLEDO
Spot
TK170815-2
2x5W LED 500 LM 3000K
chrome iron stainless steel
aluminium crystal

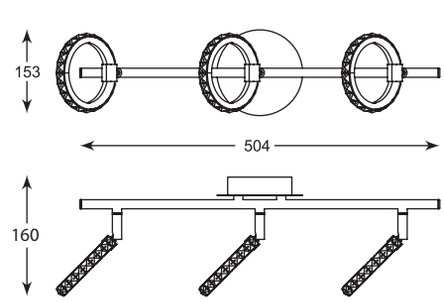

TOLEDO
Spot
TK170815-3
3x5W LED 750 LM 3000K
chrome iron stainless steel
aluminium crystal

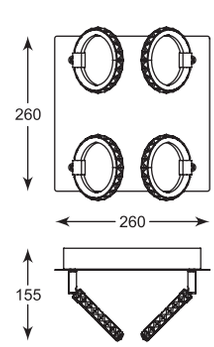

TOLEDO
Spot
CK170815-4
4x5W LED 1000 LM 3000K
chrome iron stainless steel
aluminium crystal

MARTIN

To nowatorska konstrukcja, w której żarówki otoczone zostały przez metalowe, złote klosze. Pasuje zwłaszcza do aranżacji w stylu industrialnym lub loftowym.

It is an innovative construction in which the bulbs are surrounded by metal, golden lampshades. It fits especially to industrial or loft style arrangements.

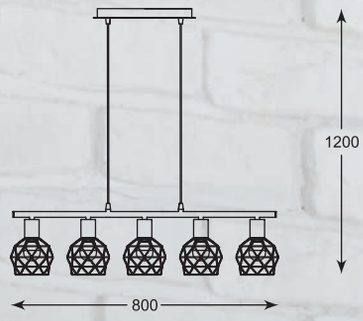

MARTIN
Pendant lamp
L171207-5
5xE14 5 MAX 40W
black gold iron

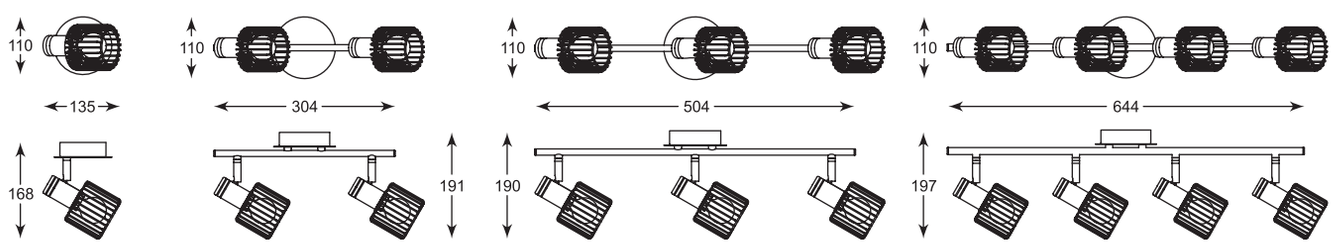

MARTIN
Spot
CK171206-1
1xE14 MAX 40W
black gold iron

MARTIN
Spot
TK171206-2
2xE14 MAX 40W
black gold iron

MARTIN
Spot
TK171206-3
3xE14 MAX 40W
black gold iron

MARTIN
Spot
TK171206-4
4xE14 MAX 40W
black gold iron

OSCAR

Wiodącym elementem serii jest niebanalny kształt klosza, oświetlenie świetnie sprawdzi się w kuchni.

The leading element of the series is the original shape of the lamp shade, the lighting will be perfect for the kitchen.

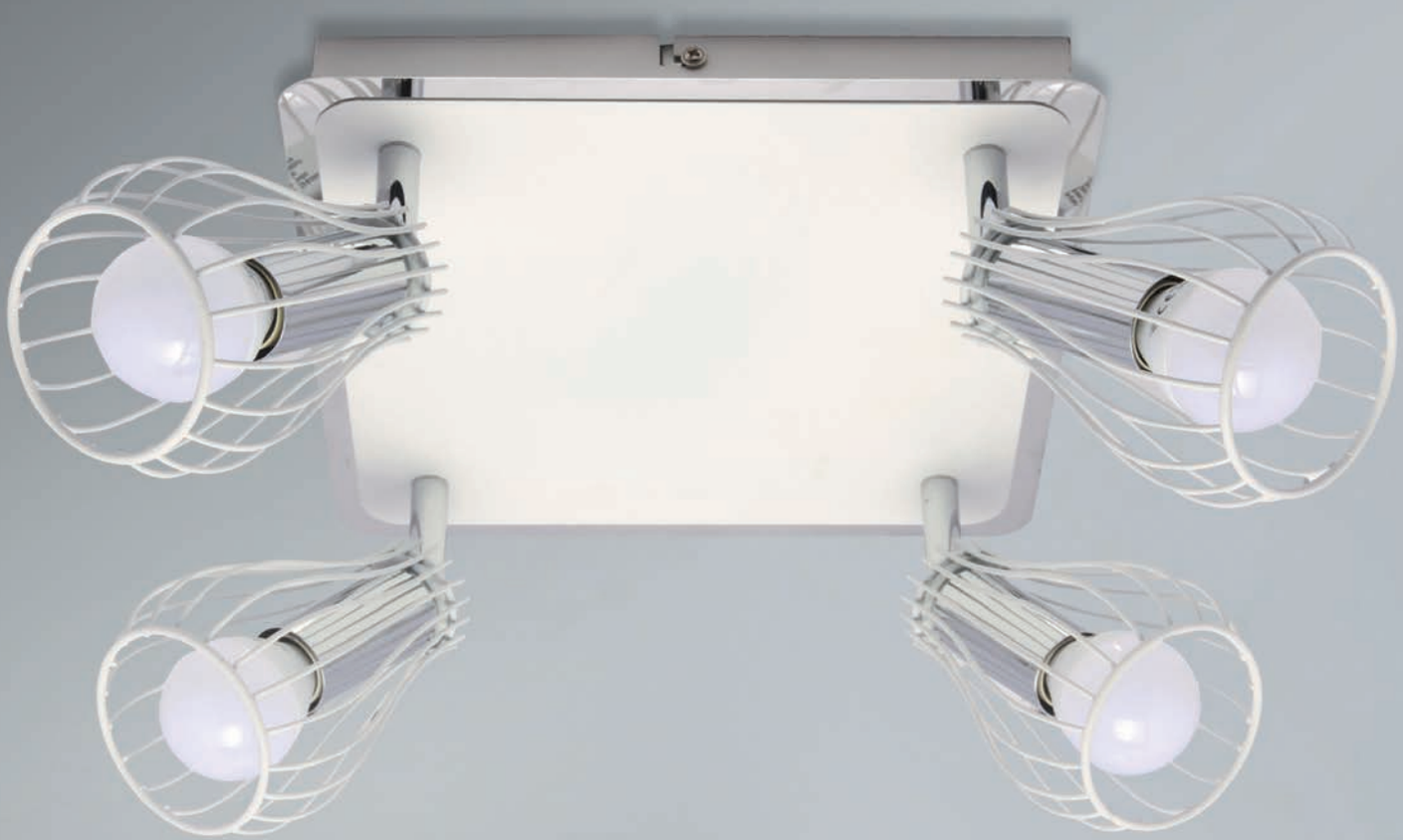

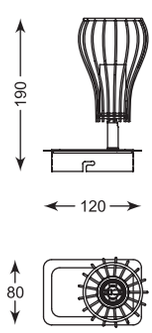

OSCAR
Spot
CK170519-1
1xE14 MAX 40W
white metal,
chrome metal

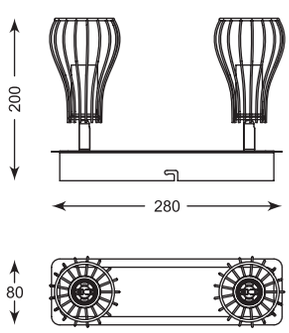

OSCAR
Spot
CK170519-2
2xE14 MAX 40W
white metal,
chrome metal

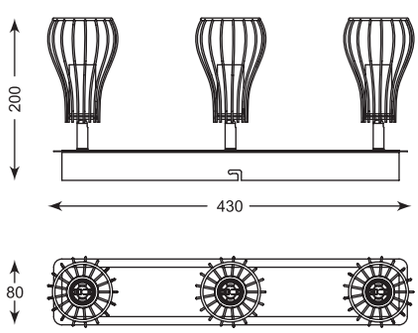

OSCAR
Spot
CK170519-3
3xE14 MAX 40W
white metal,
chrome metal

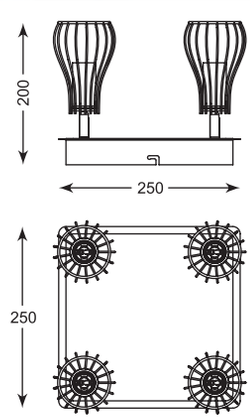

OSCAR
Spot
CK170519-4
4xE14 MAX 40W
white metal,
chrome metal

SPARKLES

Elegancka seria charakteryzująca się kloszem zamkniętym przez kryształową, fantazyjną konstrukcję lśniących elementów.

Elegant series characterized by a lampshade closed by a crystal, fancy construction of shiny elements.

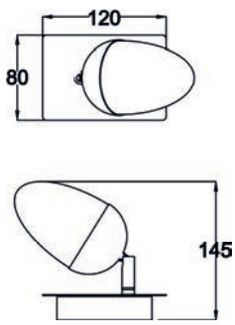

SPARKLES
Spot
CK180113-1
1xLED 5W 330LM 3000K
iron stainless, glass

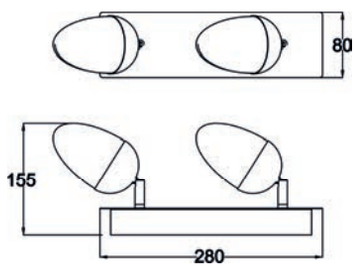

SPARKLES
Spot
CK180113-2
2xLED 5W 645LM 3000K
iron stainless, glass

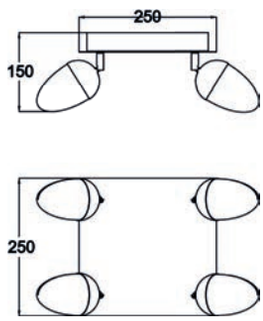

SPARKLES
Spot
CK180113-4
4xLED 5W 1155LM 3000K
iron stainless, glass

LED

SIMPLE

Wall lamp
1390
1xLED MAX 3W 160LM, 3000K
metal chrome

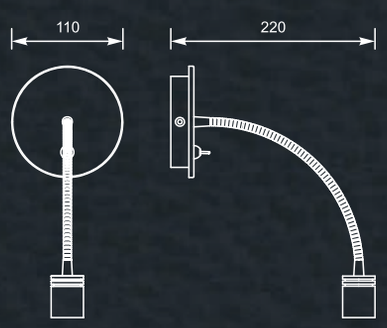

ZUMALINE

IMPRESS

Wall lamp
1444
1xLED 4.8W 600LM, 3000K
metal chrome

LED

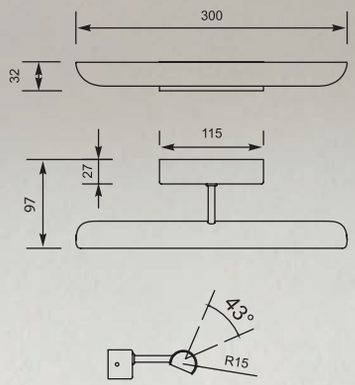

TORNADO

Wall lamp
1376
1xLED MAX 4,8W 600LM 3000K
metal chrome

ZUMALINE

1.

2.

3.

4.

5.

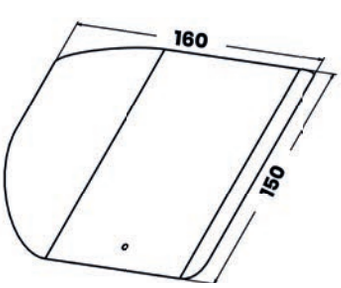

1. LUXE
Wall lamp
AWG9-046 (full white)
1xG9 MAX 40W
aluminium full white

2. LUXE
Wall lamp
AWG9-047 (full black)
1xG9 MAX 40W
aluminium full black

3. LUXE
Wall lamp
AWG9-048 (full chrome)
1xG9 MAX 40W
aluminium full chrome

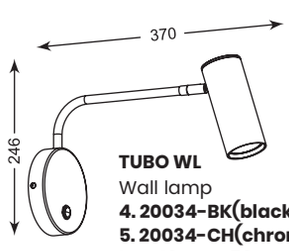

TUBO WL
Wall lamp
4. 20034-BK(black)
5. 20034-CH(chrome)
1xGU10 MAX 50W
aluminium
black or chrome

1.

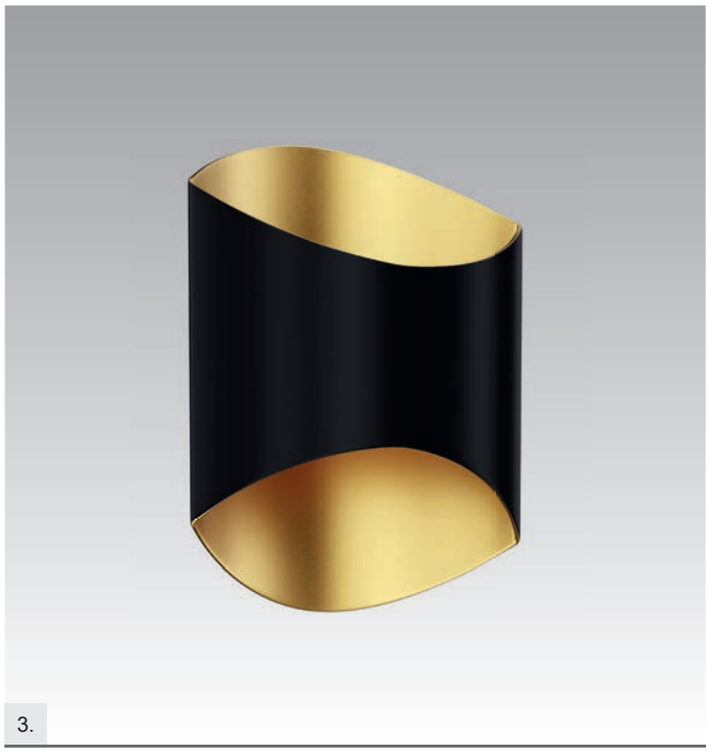

3.

2.

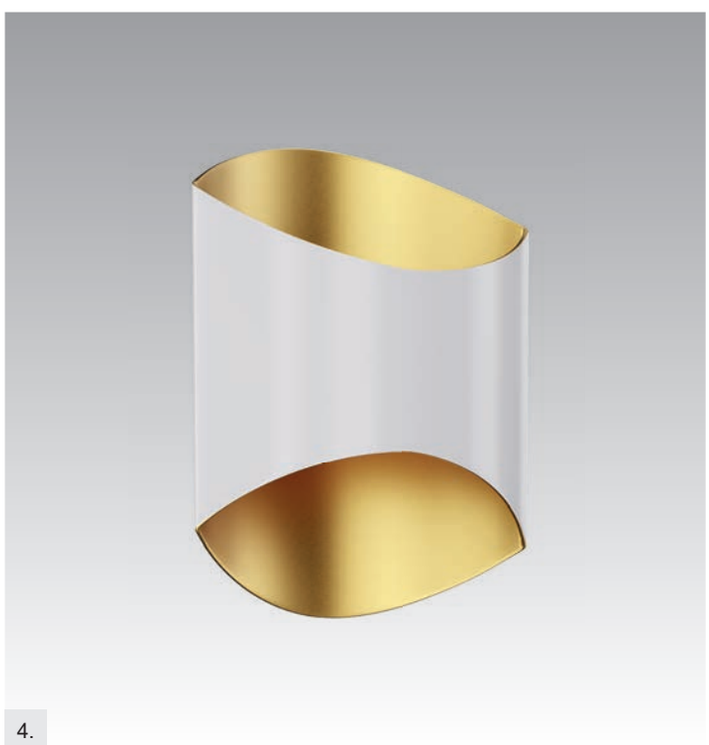

4.

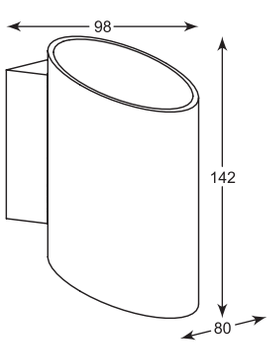

SLICE WL
Wall lamp
1. 50603-WH(white)
2. 50603-BK/GD(black-gold)
1xG9 MAX 40W
white or black
gold aluminium

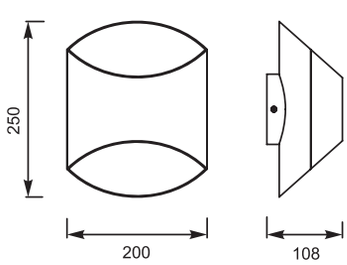

SECTION
Wall lamp
3. 1005-B/G (black-gold)
4. 1005-W/G (white-gold)
1xG9 MAX 33W
black or white and gold
aluminium

1.

3.

2.

4.

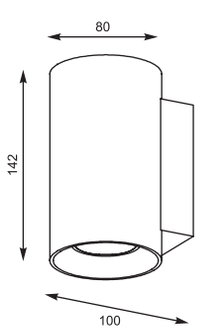

SANDY WL ROUND
Wall lamp
1. 92695 (white)
2xGU10 MAX 50W
aluminium full white

2. 92696 (black)
2xGU10 MAX 50W
aluminium full black

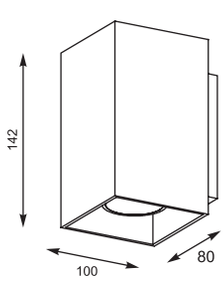

SANDY WL SQUARE
Wall lamp
3. 92697 (white)
2xGU10 MAX 50W
aluminium full white

4. 92698 (black)
2xGU10 MAX 50W
aluminium full black

1.

3.

2.

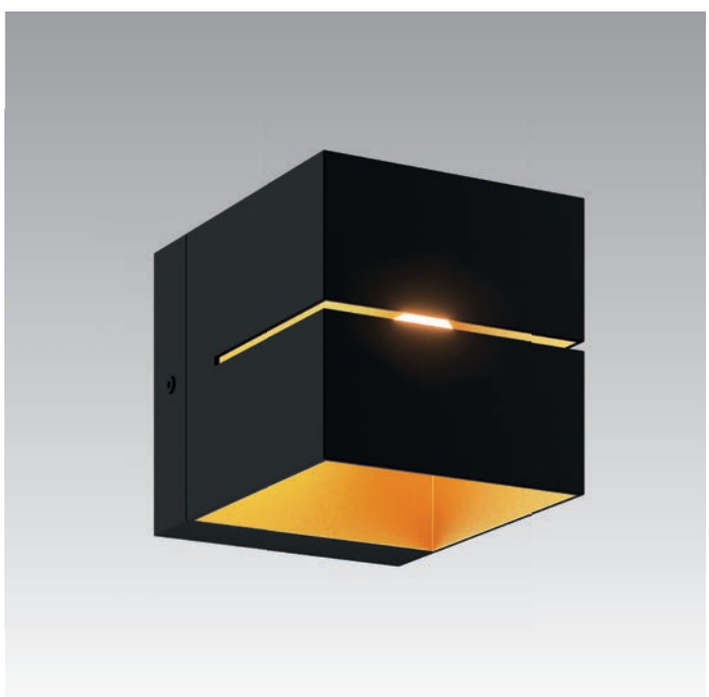

4.

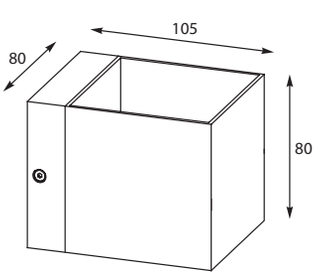

TRANSFER WL
Wall lamp
1. 90842 (black)
1xG9 MAX 40W
aluminium full black

2. 90841 (white)
1xG9 MAX 40W
aluminium full white

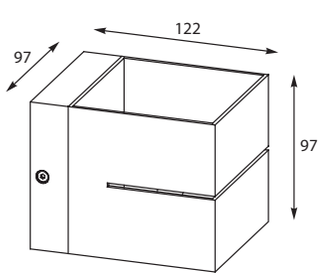

TRANSFER WL 2
Wall lamp
3. 91066 (white)
1xG9 MAX 40W
aluminium full white

4. 91067 (black)
1xG9 MAX 40W
aluminium black
outside+gold inside

1.

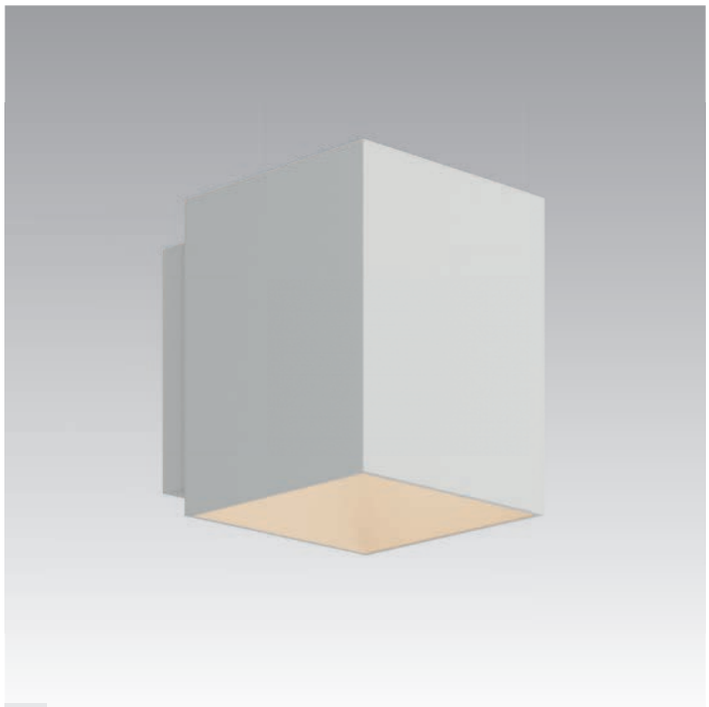

3.

2.

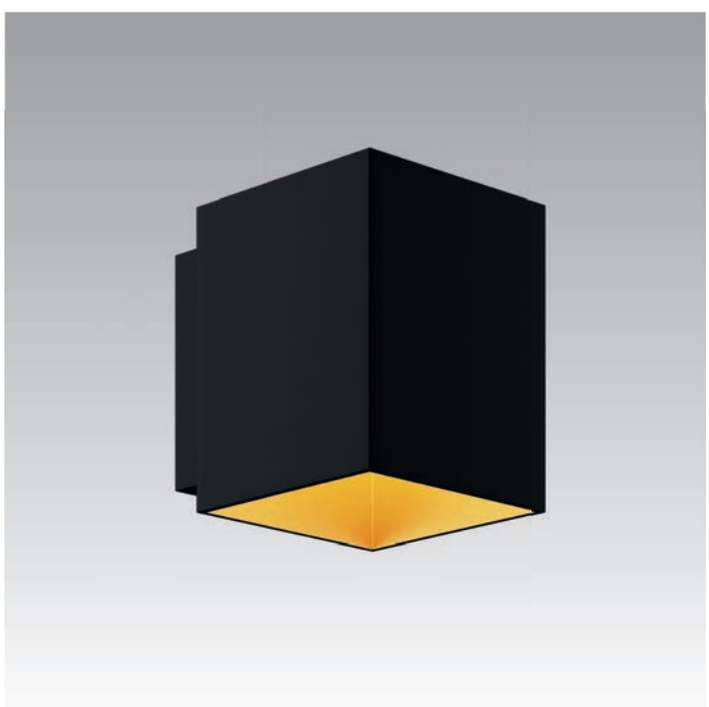

4.

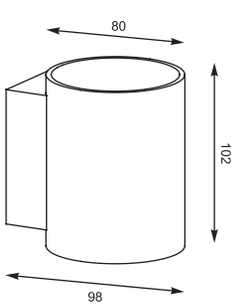

SOLA WL ROUND
Wall lamp
1. 91060 (white)
1xG9 MAX 40W
aluminium full white

2. 91061 (black)
1xG9 MAX 40W
aluminium black
outside+gold inside

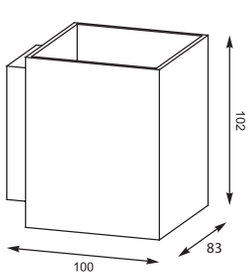

SOLA WL SQUARE
Wall lamp
3. 91062 (white)
1xG9 MAX 40W
aluminium full white

4. 91063 (black)
1xG9 MAX 40W
aluminium black
outside+gold inside

1.

3.

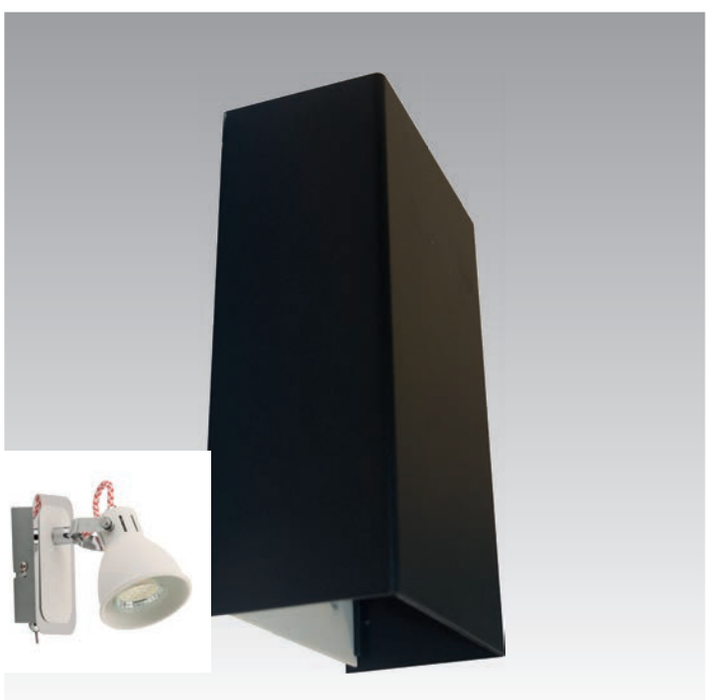

2.

4.

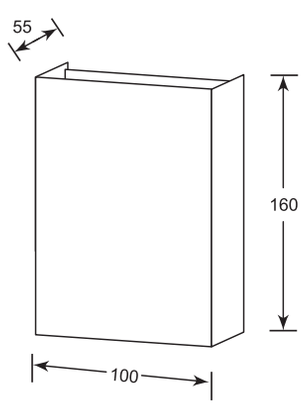

OTAN WL S
Wall lamp
1. 20079-BK (black)
2. 20079-WH (white)
2xG9 MAX 40W
aluminium
black or white

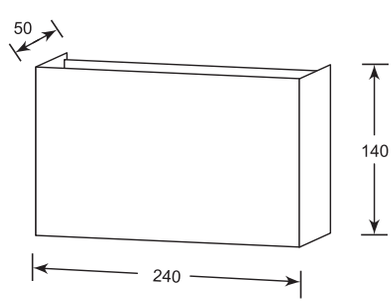

OTAN WL
Wall lamp
3. 20080-WH (white)
4. 20080-BK (black)
2xG9 MAX 40W
aluminium
black or white

1.

3.

2.

4.

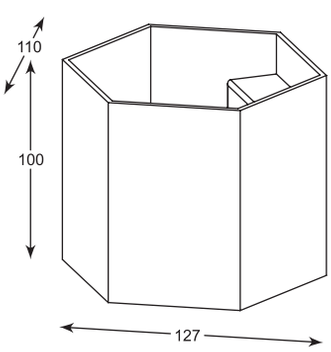

POLYGON WL
Wall lamp
1. 20070-AL (brushed silver)
2. 20070-BK (black)
3. 20070-WH (white)
4. 20070-GD (brushed gold)
1xG9 MAX 40W
silver or black
or white or gold
aluminium

SPOTY

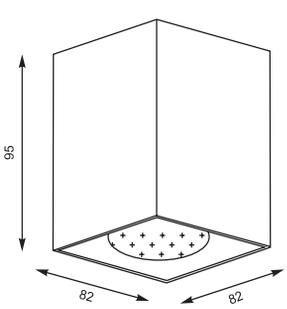

SQUARE
Spot
1. 50475-BK (black)
2. 50475-WH (white)
3. 50475-CH (chrome)
GU10 1xMAX 50W
aluminium
black or white or chrome

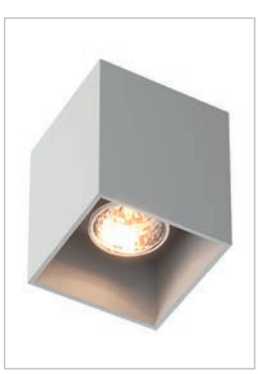

1.

4.

2.

5.

3.

6.

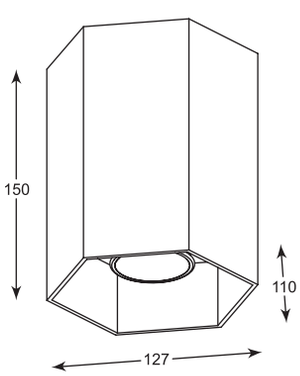

POLYGON CL 1
Spot
1. 20067-BK (black)
2. 20067-WH (white)
3. 20067-AL (brushed silver)
1xGU10 MAX 50W
black or white
or silver
aluminium

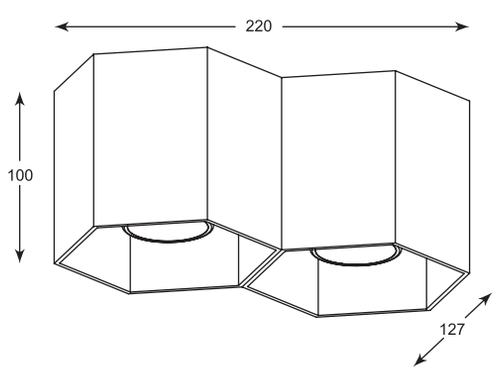

POLYGON CL 2
Spot
4. 20036-AL (brushed silver)
2xGU10 MAX 50W
aluminium

POLYGON CL 2
Spot
5. 20036-BK (black)
6. 20036-WH (white)
2xGU10 MAX 50W
black or white
aluminium

1.

2.

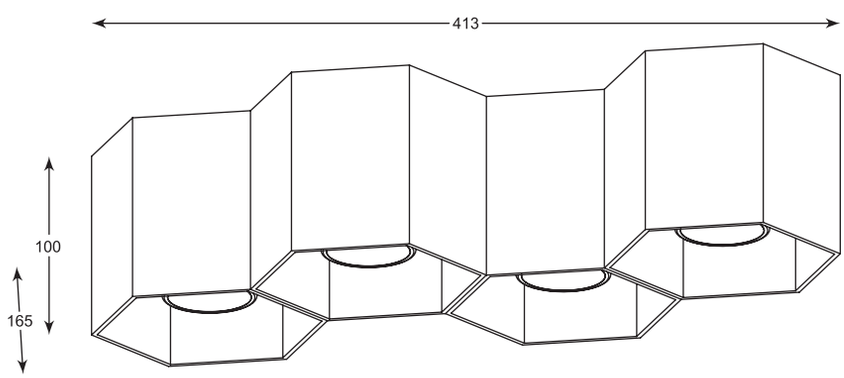

POLYGON
Spot
1. 20037-BK (black)
2. 20037-WH (white)
4xGU10 MAX 50W
black or white
aluminium

1.

3.

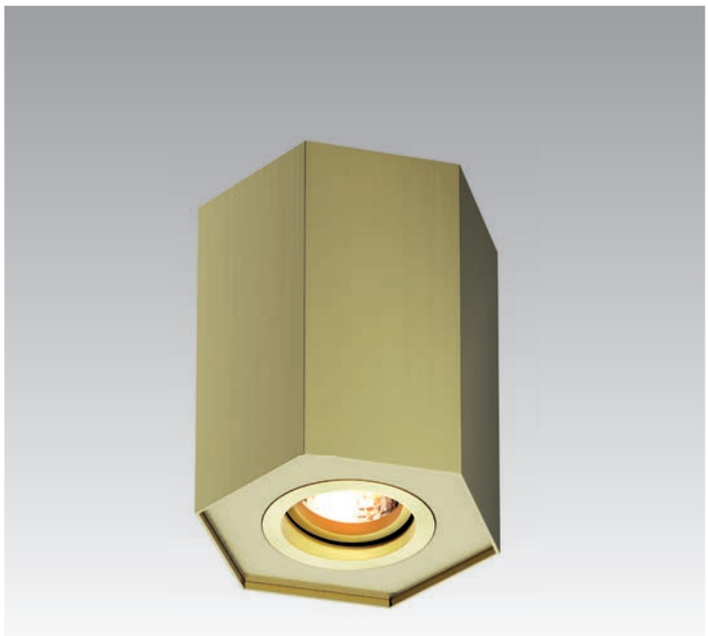

2.

4.

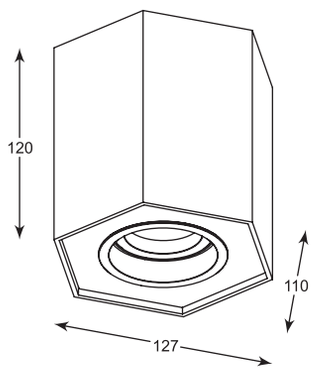

POLYGON CL R
Spot
1. 20077-WH (white)
2. 20077-GD (brushed gold)
3. 20077-BK (black)
4. 20077-AL (brushed silver)
1xGU10 MAX 50W
white or gold
or black or silver
aluminium

1.

3.

2.

4.

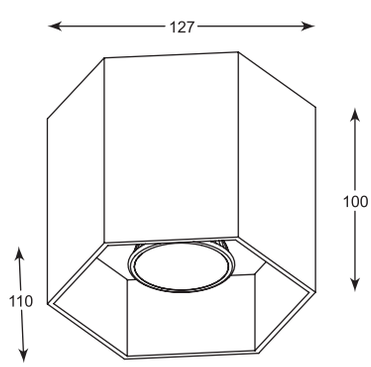

POLYGON CL 1
Spot
1. 20035-AL (brushed silver)
2. 20035-GD (brushed gold)
3. 20035-WH (white)
4. 20035-BK (black)
1xGU10 MAX 50W
silver or gold
or white or black
aluminium

1.

4.

2.

5.

3.

6.

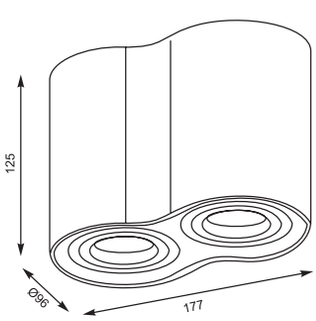

RONDOO SL2
Spot
1. 50407-WH (white)
2. 50407-BK (black)
3. 50407-GD (brushed gold)
2xGU10 50W
white or black or gold
aluminium
IP 24

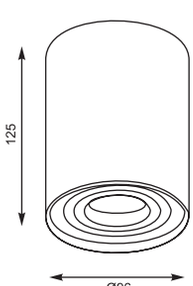

RONDOO SL1
Spot
4. 94354 (brushed gold)
5. 44805 (brushed silver)
6. 45519 (white)
7. 89201 (black)
1xGU10 MAX 50W
gold or black
or white or silver
aluminium
IP 24

7.

1.

2.

3.

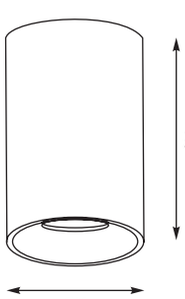

DEEP SL
Spot
1. 89313
1xGU10 MAX 50W
aluminium black-gold

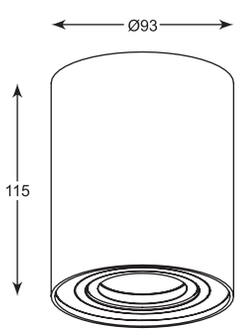

RONDOC
Spot
2. 20038-BK (black)
3. 20038-WH (white)
1xGU10 MAX 50W
black or white
aluminium

1.

2.

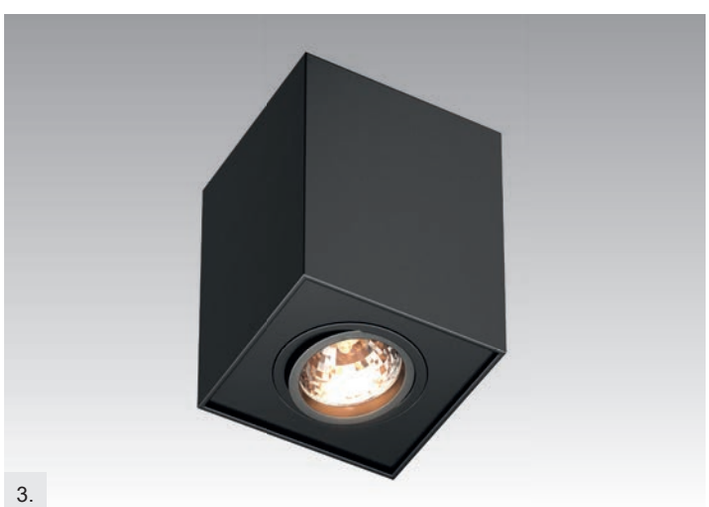

3.

4.

5.

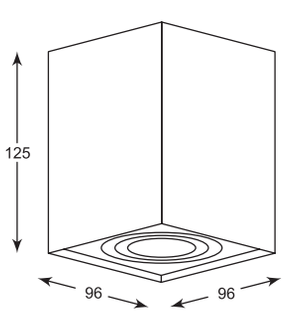

QUADRO
Spot
1. 89200-WH (white)
2. 89200-GD (brushed gold)
3. 89200-BK (black)
1xGU10 MAX 50W
aluminium
white or gold or black

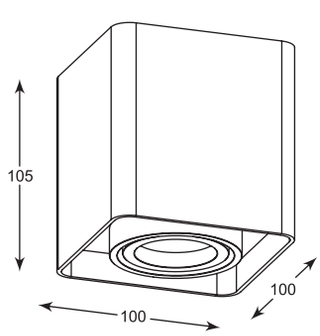

QUADRY SL 1
Spot
4. 20039-BK (black)
5. 20039-WH (white)
1xGU10 MAX 50W
aluminium
black or white

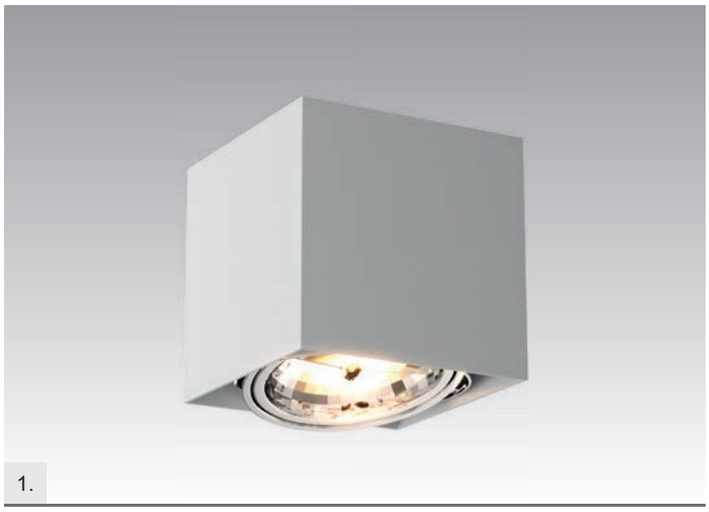

1.

2.

3.

4.

5.

6.

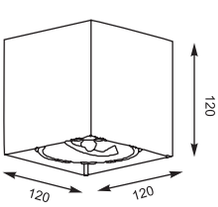

BOX SL 1
Spot
1. 89947 (white)
2. 90432 (black)
1xG9 MAX 42W
aluminium
white or black

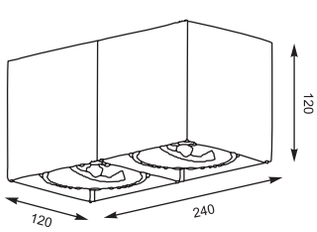

BOX SL 2
Spot
3. 90433 (black)
4. 89949 (white)
2xG9 MAX 42W
aluminium
white or black

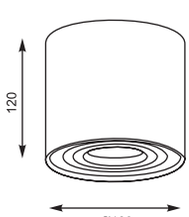

BOX
Spot
5. 50631 (white)
6. 50630 (black)
1xG9 MAX 42W
aluminium
white or black

1.

3.

2.

4.

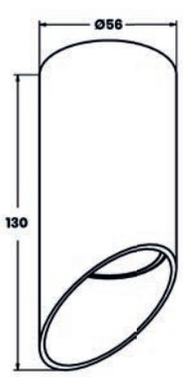

1. TUBIA SL
Spot
ACGU10-139 (black)
1xGU10 MAX 50W

2. TUBIA SL
Spot
ACGU10-138 (white)
1xGU10 MAX 50W

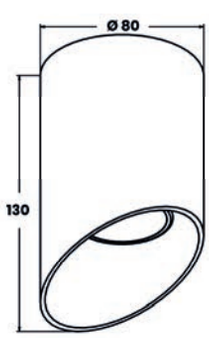

3. TUBY SL
Spot
ACGU10-132(white)
1xGU10 MAX 50W
white aluminium

4. TUBY SL
Spot
ACGU10-133(black)
1xGU10 MAX 50W
black aluminium

1.

3.

2.

4.

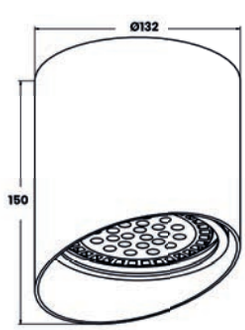

1. PARC SL
Spot
ACGU10-128(white)
1xGU10-AR111 MAX 15W
white aluminium

2. PARC SL
Spot
ACGU10-129(black)
1xGU10-AR111 MAX 15W
black aluminium

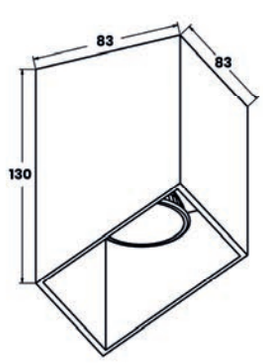

3. QUBY SL
Spot
ACGU10-131(black)
1xGU10 MAX 50W
black aluminium

4. QUBY SL
Spot
ACGU10-130(black)
1xGU10 MAX 50W
white aluminium

1.

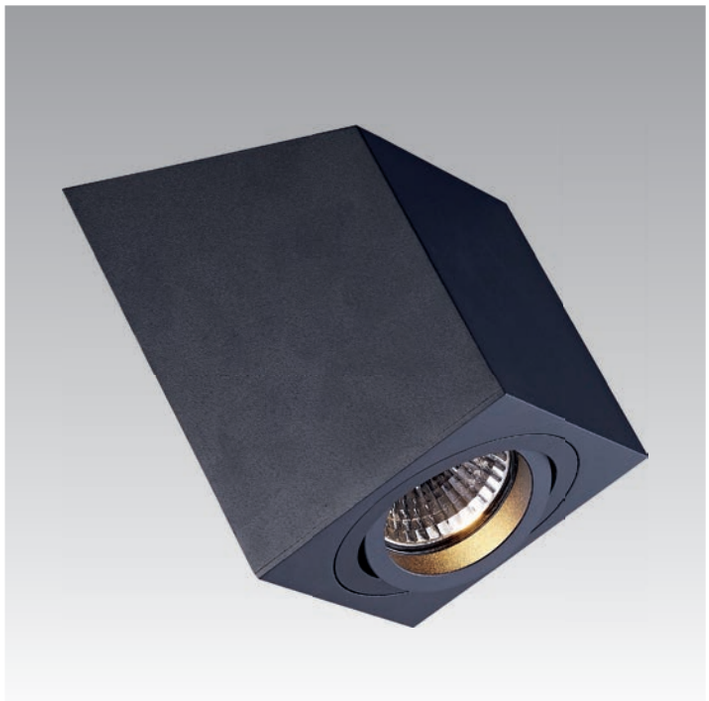

3.

2.

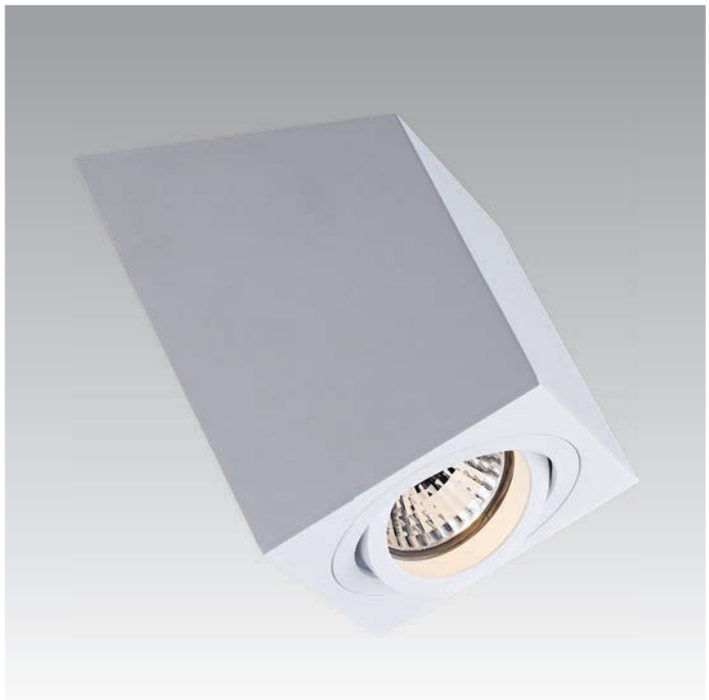

4.

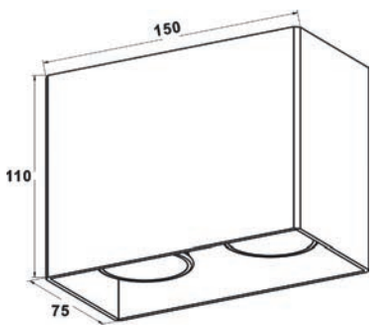

1. RONBOX SL
Spot
ACGU10-064(white)
2xGU10 MAX 50W
white aluminium

2. RONBOX SL
Spot
ACGU10-065(black)
2xGU10 MAX 50W
black aluminium

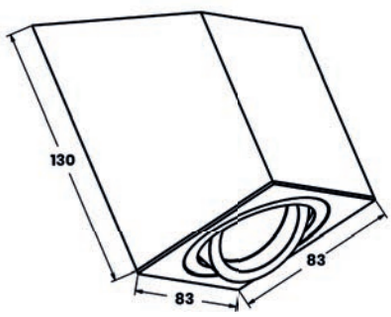

3. RONCUB SL
Spot
ACGU10-137(black)
1xGU10 MAX 50W
black aluminium

4. RONCUB SL
Spot
ACGU10-136(white)
1xGU10 MAX 50W
white aluminium

1.

3.

2.

4.

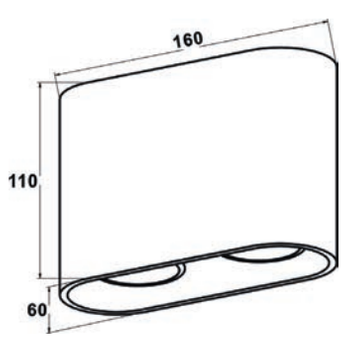

1. RONDUO SL
Spot
ACGU10-062(white)
2xGU10 MAX 50W
white aluminium

2. RONDUO SL
Spot
ACGU10-063(black)
2xGU10 MAX 50W
black aluminium

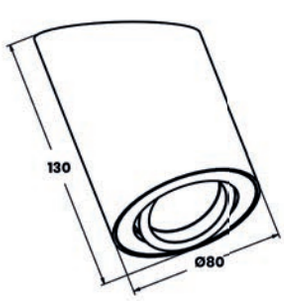

3. RONTUB SL
Spot
ACGU10-135(black)
1xGU10 MAX 50W
black aluminium

4. RONTUB SL
Spot
ACGU10-134(white)
1xGU10 MAX 50W
white aluminium

1.

3.

2.

4.

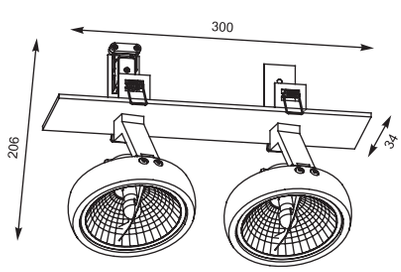

GINO DL 2
Spot
1. 20006-WH (white)
2xG9 MAX 40W
aluminium full white

2. 20006-BK (black)
2xG9 MAX 40W
aluminium full black

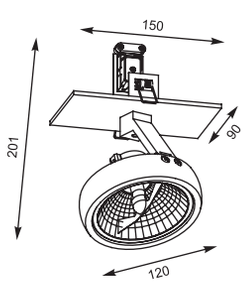

GINO DL 1
Spot
3. 20005-WH (white)
1xG9 MAX 40W
aluminium full white

4. 20005-BK (black)
1xG9 MAX 40W
aluminium full black

1.

3.

2.

4.

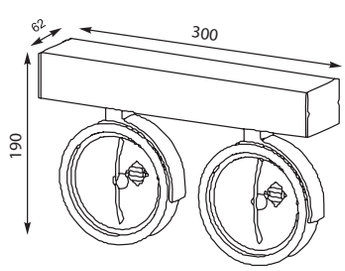

GO SL 2
Spot
1. 89964 (white)
2. 50485 (black)
2xG9 MAX 42W
aluminium
white or black

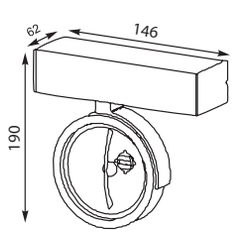

GO SL 1
Spot
3. 89962 (white)
4. 50484 (black)
1xG9 MAX 42W
aluminium
white or black

1.

2.

3.

4.

5.

6.

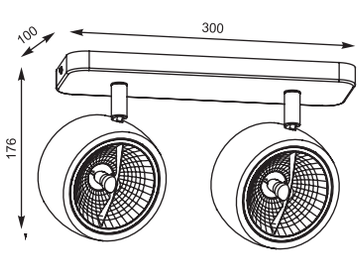

LOMO SL 2
Spot
1. 20004-BK (black)
2xG9 MAX 40W
alumnium full black
2. 20004-WH (white)
2xG9 MAX 40W
alumnium full white

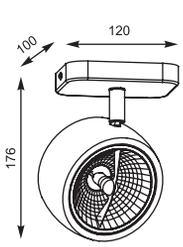

LOMO SL 1
Spot
3. 20003-BK (black)
1xG9 MAX 40W
alumnium full black
4. 20003-WH (white)
1xG9 MAX 40W
alumnium full white

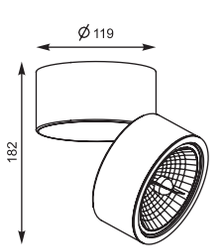

LOMO CL 1
Spot
5. 20001-BK (black)
1xG9 MAX 40W
alumnium full black
6. 20001-WH (white)
1xG9 MAX 40W
alumnium full white

1.

2.

3.

4.

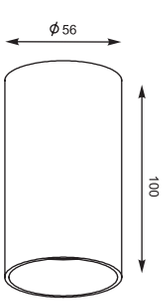

TUBA SL 1
Spot
1. 92679 (white)
1xGU10 MAX 50W
aluminium full white

2. 92680 (black)
1xGU10 MAX 50W
aluminium full black

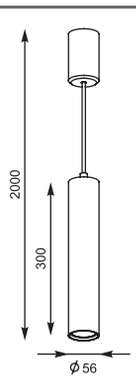

TUBA HL 1
Spot
3. 20023-WH (white)
1xGU10 MAX 50W
aluminium full white

4. 20023-BK (black)
1xGU10 MAX 50W
aluminium full black

1.

2.

3.

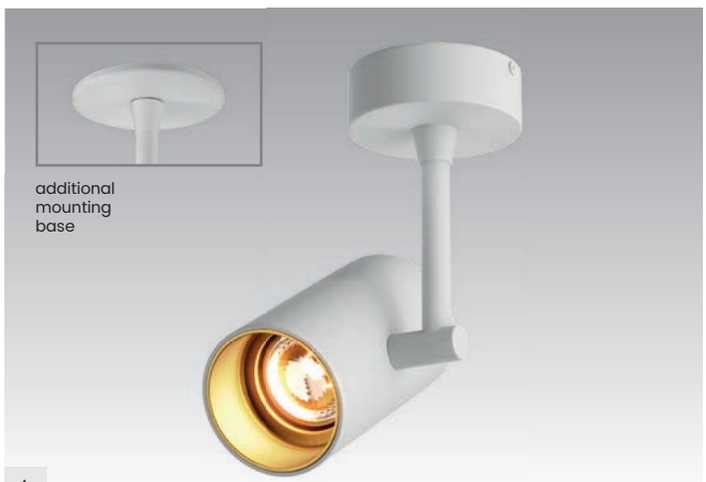

4.

5.

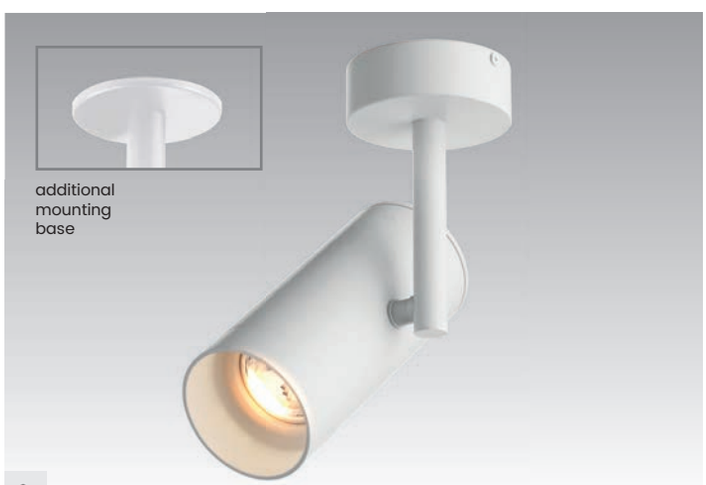

6.

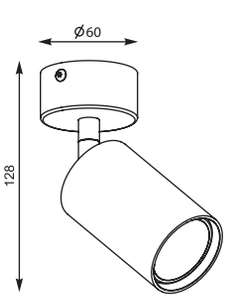

TORI SL 3
Spot
1. 20016-BK (black)
2. 20016-WH (white)
1xGU10 MAX 50W
aluminium full
black or white

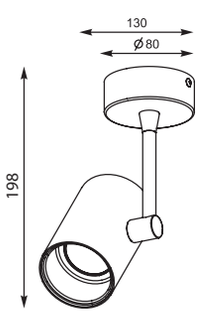

TORI SL 1
Spot
3. 20014-BK (black gold)
4. 20014-WH (white gold)
1xGU10 MAX 50W
aluminium black or white
body+gold reflector

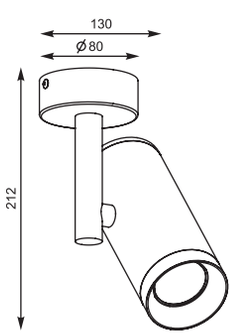

TORI SL 2
Spot
5. 20015-BK (black)
6. 20015-WH (white)
1xGU10 MAX 50W
aluminium full
black or white

1.

2.

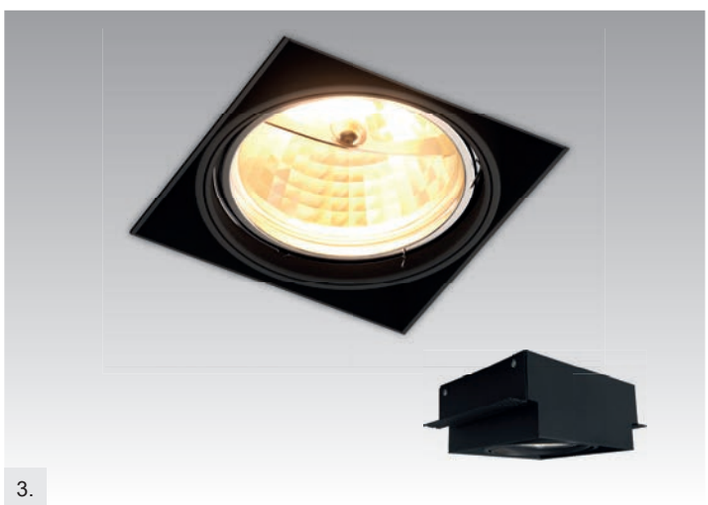

3.

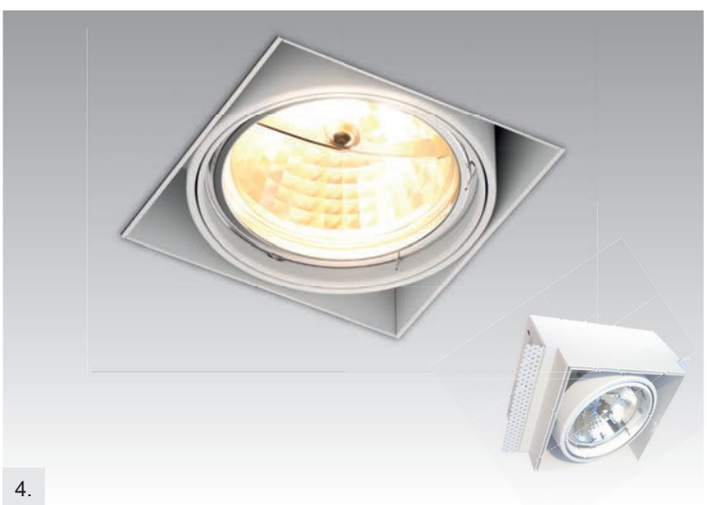

4.

5.

6.

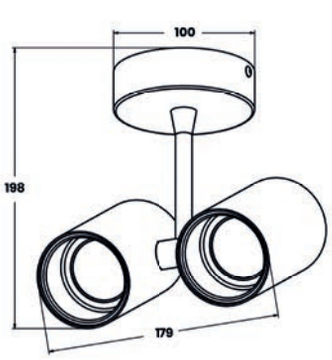

1. TORI SL1 DUO
Spot
ACGU10-126 (white-gold)
2xGU10 MAX 50W

2. TORI SL1 DUO
Spot
ACGU10-127 (black-gold)
2xGU10 MAX 50W

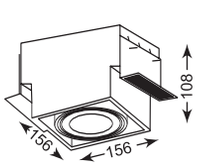

ONEON DL 111-1
Spot
3. 94363-BK (black)
4. 94363-WH (white)
1xGU10 AR111 MAX 15W
iron
black or white

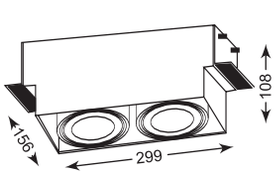

ONEON DL 111-2
Spot
5. 94364-BK (black)
6. 94364-WH (white)
2xGU10 AR111 MAX 15W
iron
black or white

1.

3.

2

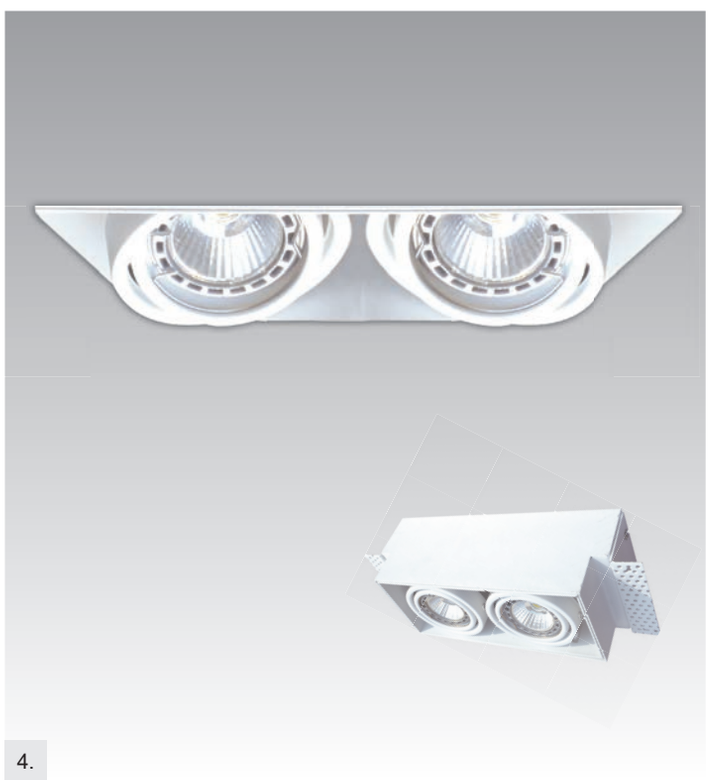

4.

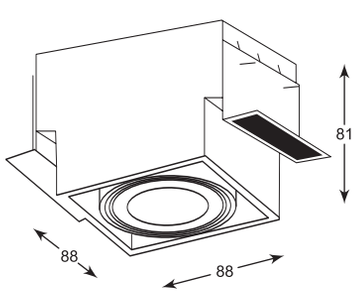

ONEON DL 50-1
Spot
1. 94361-BK (black)
2. 94361-WH (white)
1xGU10 MAX 50W
aluminium
black or white

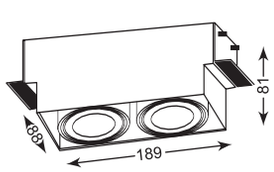

ONEON DL 50-2
Spot
3. 94362-BK (black)
4. 94362-WH (white)
2xGU10 MAX 50W
aluminium
black or white

1.

2.

3.

4.

5.

6.

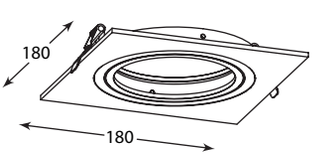

BOXY DL 1
Spot
1. 20071-WH (white)
2. 20071-BK (black)
1xGU 10 AR 111 MAX 15W
aluminium full white or black

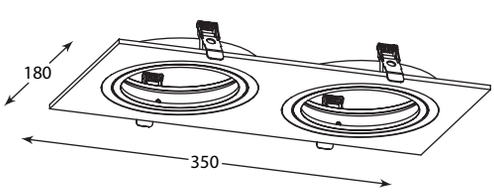

BOXY DL 2
Spot
3. 20072-BK (black)
4. 20072-WH (white)
2xGU 10 AR 111 MAX 15W
aluminium full black or white

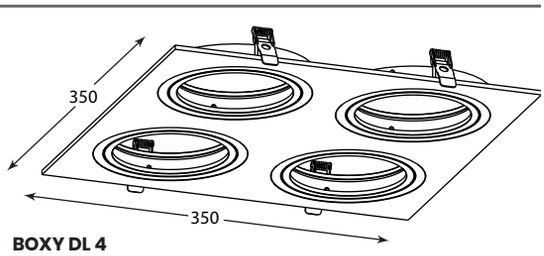

BOXY DL 4
Spot
5. 20073-WH (white)
6. 20073-BK (black)
4xGU 10 AR 111 MAX 15W
aluminium full black or white

1.

2.

3.

4.

5.

6.

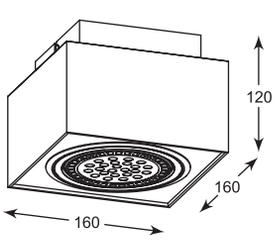

BOXY CL 1
Spot
1. 20074-WH (white)
2. 20074-BK (black)
1xGU10 AR 111 MAX 15W
aluminium full white or black

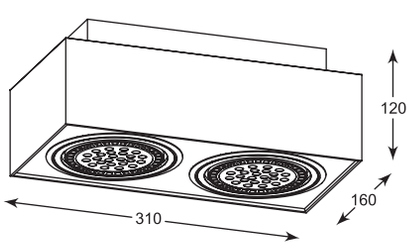

BOXY CL 2
Spot
3. 20075-BK (black)
4. 20075-WH (white)
2xGU10 AR 111 MAX 15W
aluminium full white or black

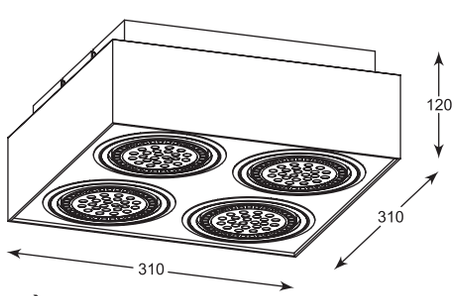

BOXY CL 4
Spot
5. 20076-WH (white)
6. 20076-BK (black)
4xGU10 AR 111 MAX 15W
aluminium full white or black

1.

3.

2.

4.

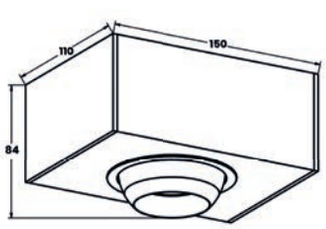

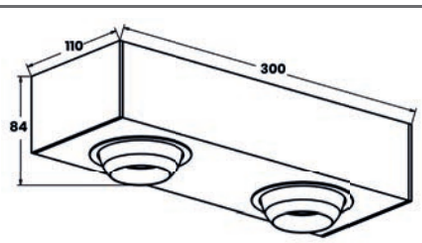

1.MAC SL
Spot
ACGU10-141
1xGU10 MAX 50W
black body silver reflector
aluminium and metal

2.MAC SL
Spot
ACGU10-140
1xGU10 MAX 50W
white body silver reflector
aluminium and metal

3.MAC SL
Spot
ACGU10-142
2xGU10 MAX 50W
white body silver reflector
aluminium and metal

4.MAC SL
Spot
ACGU10-143
2xGU10 MAX 50W
white body silver reflector
aluminium and metal

1.

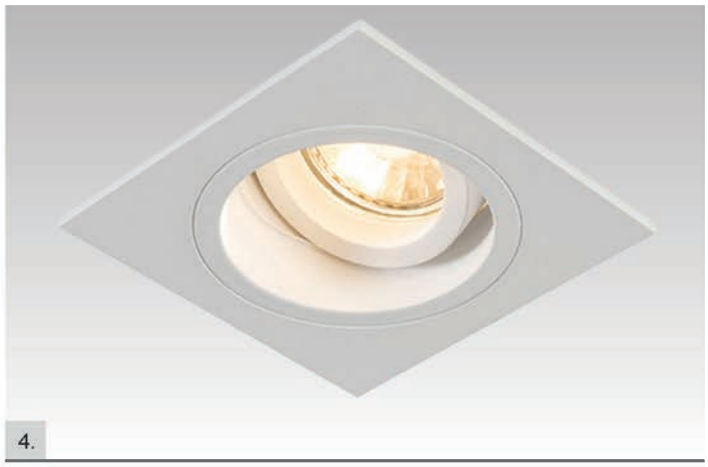

4.

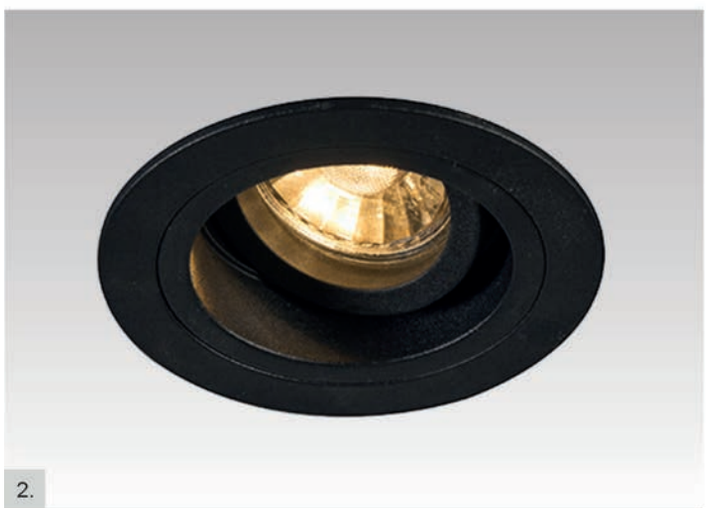

2.

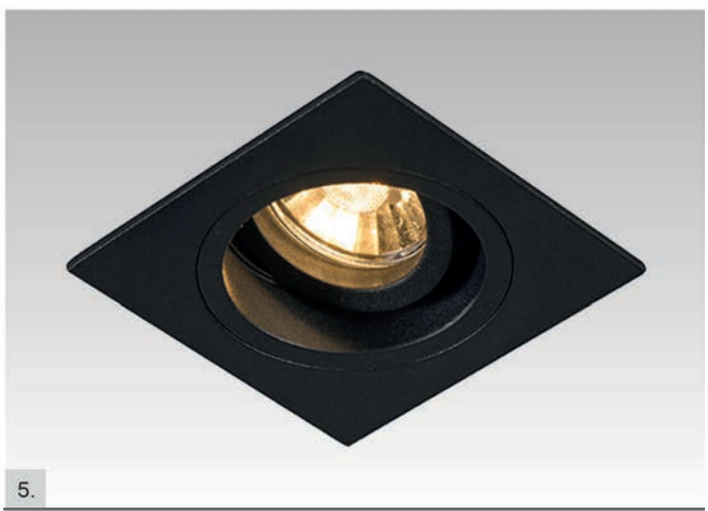

5.

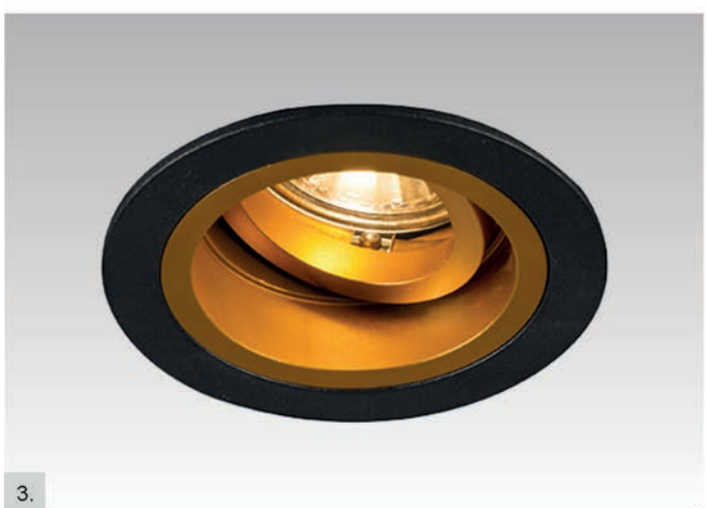

3.

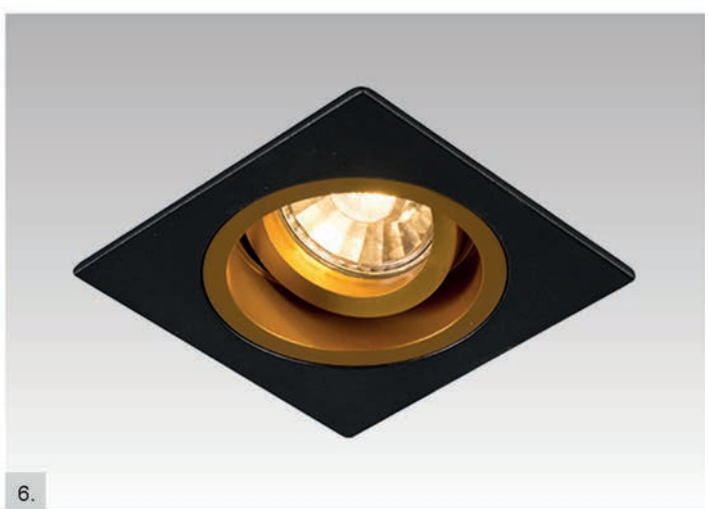

6.

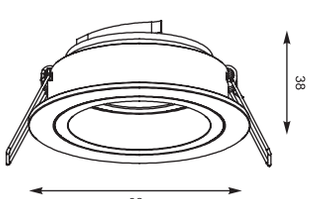

CHUCK DL ROUND
Spot
1. 92699 (white)
1xGU10 MAX 50W
aluminium full white
2. 92700 (black)
1xGU10 MAX 50W
aluminium full black
3. 92702 (black-gold)
1xGU10 MAX 50W
aluminium black body
+gold reflector

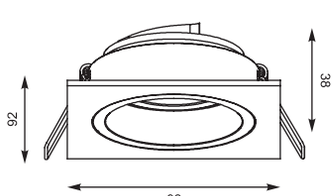

CHUCK DL SQUARE
Spot
4. 92703 (white)
1xGU10 MAX 50W
aluminium full white
5. 92704 (black)
1xGU10 MAX 50W
aluminium full black
6. 92706 (black-gold)
1xGU10 MAX 50W
aluminium black body
+gold reflector

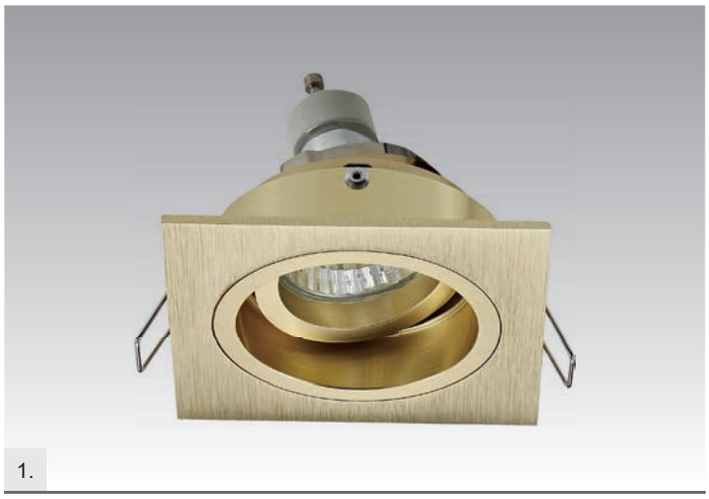

1.

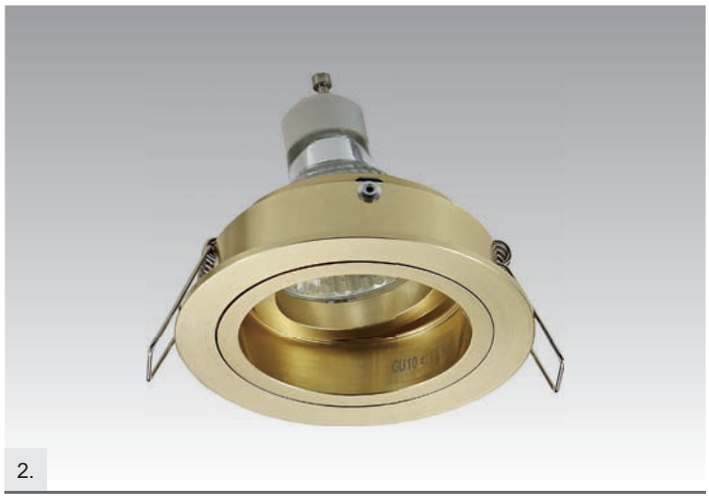

2.

3.

4.

5.

6.

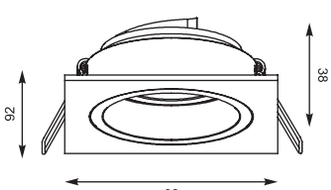

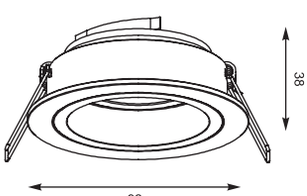

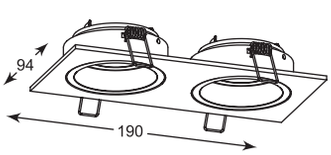

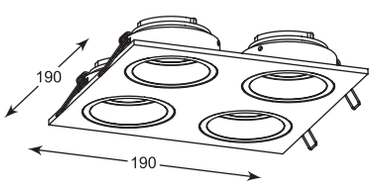

CHUCK DL SQUARE
Spot
1. 92703-GD (brushed gold)
1xGU10 MAX 50W
gold
aluminium

CHUCK DL ROUND
Spot
2. 92699-GD (brushed gold)
1xGU10 MAX 50W
gold
aluminium

CHUCK DL2 SQUARE
Spot
3. 20068-BK (black)
4. 20068-WH (white)
2xGU10 MAX 50W
aluminium white or black

CHUCK DL4 SQUARE
Spot
5. 20069-WH (white)
6. 20069-BK (black)
4xGU10 MAX 50W
aluminium white or black

ZUMALINE

ACTION

ARTIG
Ceiling lamp
CL16101
5xG9 MAX 28W
D470 H110

ROCHA
Ceiling lamp
CL14083-6
6xE27 MAX 60W
D900 H330

CARACAS
Ceiling lamp
P17200
9xG9 MAX 28W
D600 H650

CARACAS
Wall lamp
P17200-3W
3xG9 MAX 28W
L520 W100 H650

GUARAN
Ceiling lamp
G916006-4S
4xG9 MAX 28W
L860 W100 H140

GUARAN
Ceiling lamp
G916006-2S
2xG9 MAX 28W
L380 W100 H140

GUARAN
Ceiling lamp
G916006-3S
3xG9 MAX 28W
L580 W100 H140

GUARAN
Wall lamp
G916006-1R
1xG9 MAX 28W
D140 H100

QUITO
Ceiling lamp
P17266-6
6xG9 MAX 28W
L700 W400 H400

CORO
Pendant lamp
P18334-D40
3xE27 MAX 60W
D400 H1200

EDES
Table lamp
T110810
1xE27 MAX 60W
L260 W180 H350

SANTI
Pendant lamp
P17197-6
6xE14 MAX 40W
D400 H1200

SANTI
Ceiling lamp
P17197-6CL
6xE14 MAX 40W
D400

LORETO
Pendant lamp
P630B
1xE27 MAX 60W
D210 H1300

MANITO
Pendant lamp
P110718-D40
1xE27 MAX 25W
D400 H1400

SURIN
Pendant lamp
P18143A
1xE27 MAX 60W
D400 H1200

SURIN
Pendant lamp
P18143B
1xE27 MAX 60W
D400 H1200

TACNA
Pendant lamp
P15322A-D30
1xE14 MAX 40W
D300 H1200

EVORA
Pendant lamp
A153
1xE27 MAX 60W
H 1000 D 300

EVORA
Pendant lamp
A153-L
1xE27 MAX 60W
H 1100 D 400

BRAGA
Pendant lamp
A012-S
1xE27 MAX 60W
H 1100 D 300

GUARDA
Pendant lamp
A044A-L
1xE27 MAX 60W
H 1100 D 400

GUARDA
Pendant lamp
A044A-S
1xE27 MAX 60W
H 1000 D 300

CHAVEZ
Pendant lamp
A146
1xE27 MAX 60W
H 1100 D 300

ALICE
Pendant lamp
P18230-D60-BK
1xE27 MAX 60W
H 1320 W 600

CASTO
Pendant lamp
P110839-D30
1xE27 MAX 60W
H 1000 D 300

DALBERT
Pendant lamp
CL16086-1P D50-Chrome
1x24W LED 4000K
H 1100 D 500

COLTEN
Ceiling lamp
CL15008A-3CLA
1x24W LED 4000K

ARIS
Floor lamp
F18016-2
1x20W LED + 1x4.5W
LED 4000K
H 1800 L 280

BRAVA
Ceiling lamp
CL16022-1
1xG9 MAX 33W
L 140 D 100

BRAVA
Ceiling lamp
CL16022-3
3xG9 MAX 33W
H 200 D 440

BRAVA
Ceiling lamp
CL16022-6
6xG9 MAX 33W
H 210 L 850 W 530

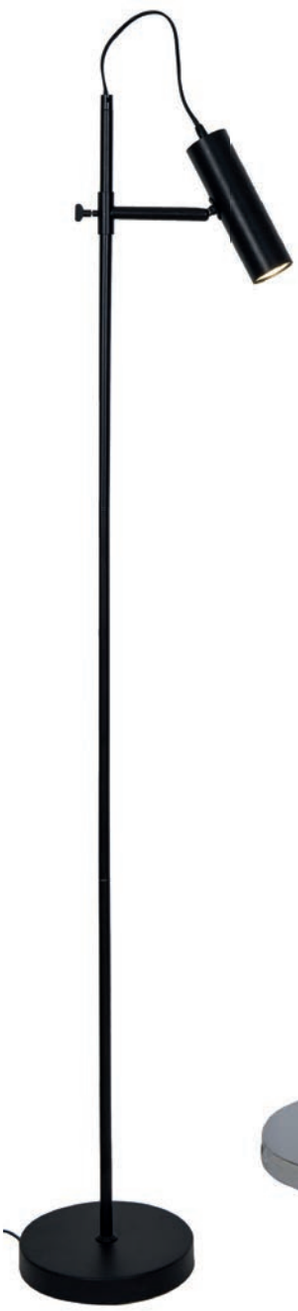

TENSO
Floor lamp
F18014-GU10-BK
1xGU10
MAX 50W
H 1520 D 340 W 230

TENSO
Floor lamp
F18014-GU10-CHROME
1xGU10
MAX 50W
H 1520 D 340 W 230

EXPIR
Table lamp
T18057-WH
1xE27 MAX 60W
H 530 D 305 W 180

Table lamp
1. H1408S-WH
2. H1408S-BCK
1xLED 7W
310LM
2700K/4500K/6000
H 285 D 260 W 150

H1633
Table lamp
1xLED 7W
310LM
4000K
H 505 L 75

1601
Table lamp
1x6w LED 350LM 12V
H 610 D 168 W 125

H1869
Table lamp
1xLED 5,5W
340LM
4000K
H 350 L 150

H1848
Table lamp
1xLED 5W
320LM
4000K
H 475 W 130 L76

JIL
Pendant lamp
P16130A-1
1xE27 MAX 60W
H 1210 D 110

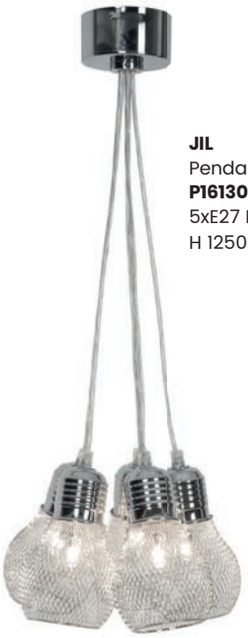

JIL
Pendant lamp
P16130A-5
5xE27 MAX 60W
H 1250 D 330

OVAL
Pendant lamp
P14071-D35
1xLED 24W
2400LM
4000K
H 1150 D 350

MADA
Pendant lamp
A093-L
1xE27 MAX 60
H 1100 D 300

MEDA
Pendant lamp
A005
1xE27 MAX 60W
H 1200 D 390

MOA
Ceiling lamp
CL15068C-D40
1xLED 24W
2720LM
4000K
H 110 D 400

MOA
Ceiling lamp
CL15068SQ-D40
1xLED 24W
2720LM
4000K
H 110 L 400 W 400

MOREN
Ceiling lamp
CL18021-D40
1xLED 24W
2495LM 4000K
H 96 D 400

LIA
Ceiling Lamp
P749A
4xE14 MAX 40W
H 145 D 615

PARIA
Pendant lamp
P15090-3
3xE14 MAX 40W
H 1150 D 620

PARIA
Pendant lamp
P15090-5
5xE14 MAX 40W
H 1150 D 620

PARIA
Wall lamp
P15090A-1W
1xE14 MAX 60W
H 280 L 230 D 150

PARIA
Pendant lamp
P15090-1
1xE27 MAX 60W
H 1150 D 320

MEGAN
Table lamp
T15027
1xE27 MAX 60W
H 600 D 350

MEGAN
Pendant lamp
T15027-1P
1xE27 MAX 60W
H 1300 D 350

SINTRA
pendant lamp
A001
1xE27 MAX 60W
H 1100 D 320

TREVE
Pendant lamp
F074
1xE27 MAX 60W
H 940 D 320
metal body, acrylic
transparent crystals

SKIN
Pendant lamp
P18055
1xE27 MAX 60W
H 1320 D 250

MAGNOLIA
Wall lamp
RLB94016-2A (clear)
2xE14 MAX 40W
W 340 D 180 H 220

MAGNOLIA
Wall lamp
RLB94016-2B (black)
2xE14 MAX 40W
W 340 D 180 H 220

MAGNOLIA
Pendant lamp
RLD94016-5A (clear)
5xE14 MAX 40W
W 480 L 1100

MAGNOLIA
Pendant lamp
RLD94016-5B (black)
5xE14 MAX 40W
W 480 L 1100

LUCE
Pendant lamp
RLD92132-5
5xG9 MAX 42W
D 400 L 1000

GIULIO
Pendant lamp
P12105-L-5
5xE27 MAX 60W
D 450 H 1200

HORTA
Pendant lamp
P14030C
1xE27 MAX 60W
D 110 H 1200

HORTA
Pendant lamp
P14030C-5
5xE27 MAX 60W
D 470 H 1080

ELSTRA
Pendant lamp
1. P16151-WH
2. P16151-BK
1xE27 MAX 60W
D 200 H 1200

CUBE
Pendant lamp
P17084-D20
1xE27 MAX 60W
L 200 W 200 H 1380

VERTO
Pendant lamp
P16182-D57
1xE27 MAX 60W
D 570 H 1200

VERTO
Pendant lamp
P16180A-D44
1xE27 MAX 60W
D 440 H 1200

MARL
Pendant lamp
P17212
1XE27 MAX 60W
D 200 H 1300

BALVE
Wall lamp
G917006-1R
1xE14 MAX 40W
D 230 W 150 H 125

BALVE
Ceiling lamp
G917006-2B
2xE14 MAX 40W
L 320 W 150 H 230

BALVE
Ceiling lamp
G917006-3R
3xE14 MAX 40W
D 280 H 230

POTOS
Ceiling lamp
CL13077C-4 (B)
4xE14 MAX 40W
D 300 H 200

GASTER
Ceiling lamp
GU16016-2TU-BK
2xGU10 MAX 50W
L 305 W 80 H 160

GASTER
Ceiling lamp
GU16016-4TU2-BK
4xGU10 MAX 50W
L 690 W 80 H 160

GASTER
Wall lamp
GU16016-1R-BK
1xGU10 MAX 50W
D 140 W 80 H 80

GASTER
Ceiling lamp
GU16016-3TU-BK
3xGU10 MAX 50W
L 485 W 80 H 160

GASTER
Ceiling lamp
GU16016-2TU-WH
2xGU10 MAX 50W
L 305 W 80 H 160

GASTER
Ceiling lamp
GU16016-4TU2-WH
4xGU10 MAX 50W
L 690 W 80 H 160

GASTER
Wall lamp
GU16016-1R-WH
1xGU10 MAX 50W
D 140 W 80 H 80

GASTER
Ceiling lamp
GU16016-3TU-WH
3xGU10 MAX 50W
L 485 W 80 H 160

DRISO
Wall lamp
LED16032A-1R
1xLED 4W 400LM 3000K
D 115 W 80 H 90

DRISO
Ceiling lamp
LED16032A-2TU
2xLED 4W 800LM
3000K
L 330 W 90 H 110

DRISO
Ceiling lamp
LED16032A-3SP
3xLED 4W 1200LM
3000K
D 360 H 125

AQUA
Wall lamp
LED16046-1R
1xLED 4 W 400LM,
3000K, IP44
D 130 W 70 H 120

AQUA
Ceiling lamp
LED16046-2B
2xLED 4 W 800LM,
3000K, IP44
L 300 W 70 H 120

AQUA
Ceiling lamp
LED16046-3R
3xLED 4 W 1200LM,
3000K, IP44
D 250 H 120

BERN
Wall lamp
LED17008-1R
1xLED 5 W 450LM,
3000K
D 140 W 130 H 130

BERN
Ceiling lamp
LED17008-2TU
2xLED 5 W 900LM,
3000K
L 405 W 120 H 160

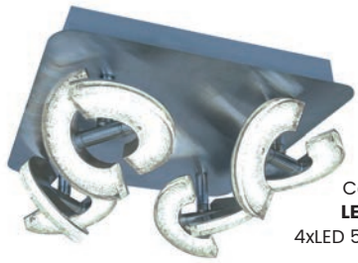

BERN
Ceiling lamp
LED17008-4R
4xLED 5 W 1800LM,
3000K
L 260 W 260 H 130

OLTEN
Wall lamp
R5017002-1R
1xE14 MAX 40W
D 120 W 80 H 200

OLTEN
Ceiling lamp
R5017002-2S
2xE14 MAX 40W
L 390 W 200 H 150

OLTEN
Ceiling lamp
R5017002-5CL
5xE14 MAX 40W
D 580 H 260

NICOLA
Wall lamp
G916008-1R
1xG9 MAX 25W
D 155 W 80 H 80

NICOLA
Ceiling lamp
G916008-5CL
5xG9 MAX 25W
L 680 W 500 H 210

CLOE
Ceiling lamp
CL16157-3
3xG9 MAX 40W
D 450 H 210

LUCIO
Ceiling lamp
CL13110-D40
1xLED 24W
2000LM,2700-6500
D 400 H 65

LUCIO
Ceiling lamp
CL13110-D60
1xLED 60W
5500LM,2700-6500
D 600 H 65

CLARA
Ceiling lamp
1.CL12029-D30-BK
2.CL12029-D30-WH
2xE14 MAX 40W
D 300 H 120

CLARA
Ceiling lamp
1.CL12029-D40-BK
2.CL12029-D40-WH
2xE14 MAX 40W
D 400 H 120

NOBLI
Wall lamp
WL16015
1xLED 12 W 1200LM, 3000K
L 800 W 85 H 35

NOBLI
Wall lamp
WL16016
1xLED 12 W 1200LM, 3000K
L 600 W 75 H 35

GARITA
Table lamp
1. T51S-BK
2. T51S-WH
1xE27 MAX 60W
W 115 D 195 H 340

BRUNO
Pendant lamp
WL243B-3P
3xE27 MAX 60W
L 900 W 140 H 1320

BRUNO
Wall lamp
WL243B
1xE27 MAX 60W
D 300-630 W 210 H 320

CLAMART
Wall lamp
P15091-1W
1xE14 MAX 40W
D 300 W 150 H 260

CLAMART
Pendant lamp
P15091-5
5xE14 MAX 40W
D 550 H 1000

ALBI
Pendant lamp
P17194-3
3xE14 MAX 40W
D 490 H 520

ALBI
Wall lamp
P17194-1W
1xE14 MAX 40W
D 220 W 90 H 320

JOSE
Floor lamp
P15079-1F
1xE27 MAX 60W
D 600 W 250 H 1470

JOSE
Table lamp
P15079-1T
1xE27 MAX 60W
D 480 W 180 H 620

JOSE
Pendant lamp
P15079-D22
1xE27 MAX 60W
D 250 H 1200

LINO
Table lamp
F16026-1T
1xE27 MAX 60W
D 160 H 480

LINO
Floor lamp
F16026
1xE27 MAX 60W
D 250 H 1600

NANCY
Pendant lamp
P17135
1xE14 MAX 40W
D 400 H 1200

SINES
Table lamp
P16150-1T(D30)
1xE27 MAX 60W
D 320 H 320

SINES
Pendant lamp
P16150-D30
1xE27 MAX 60W
D 300 H 1200

JENA
Pendant lamp
P17106-7
7xE14 MAX 40W
D 530 H 1000

AGGEO
Ceiling lamp
P15103-1CL-D45
1xE27 MAX 60W
D 450 H 250

MILTON
Pendant lamp
P15238A
1xE27 MAX 60W
D 350 H 1200

BLOIS
Pendant lamp
1. P16194-WH
2. P16194-BK
5xE14 MAX 40W
D 450 H 1200

ALEX
Ceiling lamp
RLX94874-5
5xE14 MAX 40W
D 400 H 400

BENTO
Pendant lamp
RLD931021-1 (black)
1xE27 MAX 60W
D 400 L 1200

BULB
Pendant lamp
RLD93024-1A
1xE27 MAX 60W
D 280 L 1000

BULB
Floor lamp
RLL93024-1A
1xE27 MAX 60W
D 250 H 1600

CAFE
Pendant lamp
RLD93139-4C (gray)
4xE27 MAX 60W
D 500 H 250 L 1200

CAFE
Pendant lamp
1. RLD93139-4A (white)
2. RLD93139-4B (black)
4xE27 MAX 60W
D 500 H 250 L 1200

CANINI
Pendant lamp
RLD92709-6 (white)
6xG9 MAX 42W
D 500 L 1200

CARMEN
Pendant lamp
RLD94103-3
3xE14 MAX 40W
D 480 L 1000

CARMEN
Pendant lamp
RLD94103-5
5xE14 MAX 40W
D 550 L 1000

CAFE
Pendant lamp
1. RLD93139-4LB (black)
2. RLD93139-4LA (white)
4xE27 MAX 60W
D 600 H 250 L 1200

CAFE
Ceiling lamp
1. RLX93139-4B (black)
2. RLX93139-4A (white)
4xE27 MAX 60W
D 500 H 280

CERI
Table lamp
RLT94118-1B
1xE14 MAX 40W
D250 H 400

CLOE
Wall lamp
RLB94875-1 (black)
1xE27 MAX 60W
D 160 W 210 H 470

ELBA
Pendant lamp
RLD94104-1C
1xE14 MAX 40W
D 160 L 1200

FAUSTO
Pendant lamp
RLD931019-3 (black)
3xE27 MAX 60W
W 650 D 150 L 1200

JUMBLE
Floor lamp
RLL92067-3
3xG9 MAX 42W
D 240 H 1680

INEZ
Ceiling lamp
RLX93023-2A
2xE27 MAX 60W
D 280 H 150

INEZ
Ceiling lamp
RLX93023-3A
3xE27 MAX 60W
D 370 H 210

JUMBLE
Ceiling lamp
RLX92067-5B
5xG9 MAX 42W
W 800 H 300

INEZ
Pendant lamp
RLD93023-2A
2xE27 MAX 60W
D 280 L 1000

INEZ
Pendant lamp
RLD93023-3A
3xE27 MAX 60W
D 370 L 1000

JUMBLE
Ceiling lamp
RLX92067-3B
3xG9 MAX 42W
W 420 H 220

JUMBLE
Ceiling lamp
RLX92067-8B
8xG9 MAX 42W
D 800 H 170

LETA
Table lamp
1. RLT93350-1A (white)
2. RLT93350-1B (black)
1xE27 MAX 60W
D 280 H 545

LETA
Pendant lamp
1. RLD93350-1W (white)
2. RLD93350-1B (black)
1xE27 MAX 60W
D 300 L 1000

LETA
Pendant lamp
RLD93350-L1B (black)
1xE27 MAX 60W
D 450 L 1200

LETA
Pendant lamp
RLD93350-L1W (white)
1xE27 MAX 60W
D 450 L 1200

ROSA
Pendant lamp
RLD92093-3
3xG9 MAX 42W
D 300 L 1000

ROSA
Pendant lamp
RLD92093-4
4xG9 MAX 42W
D 400 L 1000

PICTOR
Ceiling lamp
1. RLX94023-3W (white)
2. RLX94023-3B (black)
3xE14 MAX 40W
W 350 H 180

PICTOR
Wall lamp
1. RLB94023-1B (black)
2. RLB94023-1W (white)
1xE14 MAX 40W
D 100 W 160 H 240

MEDEL
Ceiling lamp
RLX94188-4
4xE14 MAX 40W
W 400 H 185

RANGEL
Ceiling lamp
RLX92711-5
5xG9 MAX 42W
W 400 H 270

MARVEL
Table lamp
RLT93178-1A
1xE27 MAX 60W
D 280 H 580

SILLO
Pendant lamp
P14120-1
1xE27 MAX 60W
D250 H1200

SILLO
Pendant lamp
P14120-1-D40
1xE27 MAX 60W
D380 H1250

AMY
Pendant lamp
P12168I
1xE27 MAX 60W
D200 H1450

FINA
Pendant lamp
P18035-1
1xE14 MAX 40W
D110 H1350

FINA
Pendant lamp
P18035-4
4xE14 MAX 40W
L860 H1380

SILLO
Pendant lamp
P14120-3
3xE27 MAX 60W
L960 W250 H1170

SALLY
Table lamp
T16079
1xE14 MAX 40W
D160 H290

CARMEN
Wall lamp
RLB94103-1
1xE14 MAX 40W
D180 H210

MELLY
Floor lamp
P17247-1F
1xE27 MAX 60W
D340 H1530

IVIA
Pendant lamp
P12082D-D25
1xE27 MAX 60W
D250 H1300

IVIA
Pendant lamp
P12082D-3
3xE27 MAX 60W
L620 W200 H1260

TIFANNY
Pendant lamp
P17127-4
4xE14 MAX 40W
D400 H1320

MELLY
Pendant lamp
P17247-D40
1xE27 MAX 60W
D400 H1200

SERPENTIS
Ceiling lamp
RLX92350-20
20xG9 MAX 40W
D450 H240

COSI
Ceiling lamp
RLX94775-3
3xE14 MAX 40W
D400 H160

FUSION
Pendant lamp
RLX93410-1
1xE27 MAX 60W
D400 H450

NAME INDEX A-Z

A

ADEM 244
AGGEO 313
ALBI 313
ALEX 261 - 314
ALICE 306
ALMERIA 17
ALTA 243
AMADO 172 - 173
AMEDEO 15
AMY 317
ANDREA 151
ANTARCTICA 35
ANTENNE 159 - 161
ANZIO 31
AQUA 311
ARIS 306
ARTEMIDA 75
ASCONA 245
ATOM 139
AURELIA 69

B

BALVE 311
BALVI 207
BELLA 37
BELLE 223
BELLIS 247
BELLO 175
BENTO 314
BERN 312
BERO 105
BIAGIO 53
BLINK 77 - 79
BLOIS 313
BOX 287
BOX SL 287
BOXY CL 300
BOXY DL 299
BRAGA 306
BRANCA 163
BRAVA 307
BRESSO 87
BRUNO 312
BULB 314

C

CAFE 314
CANDE 155
CANDEL 140
CANINI 314
CARMEN 314 - 317
CARRELLO 226 - 227
CASTO 306
CENTAURUS 39
CERI 315
CESARE 149
CEUTA 19
CHAMPAGNE 97 - 98
CHANDELIER 119
CHAVEZ 306
CHUCK DL ROUND 302
CHUCK DL SQUARE 302 - 303
CIRCLE 231 - 232
CIRO 73
CLAMART 313
CLARA 312
CLOE 312 - 315
CLORIN 212
COLTEN 306
CORATO 23 - 25
CORIA 18
CORNELIO 16
COSI 317
COSTA 259
COSTANZA 180 - 181
CROSS 218
CRYSTAL 45 - 52
CUBE 310

D

DALBERT 306
DARIO 211
DECO 177
DEEP SL 285
DONATO 117
DORIS 237
DOTS 156
DRISO 311

E

ELBA 315
ELIA 264
ELSTRA 310
ENERGY 186
ENZO 239
EVORA 306
EXPIR 307

F

FALCON 200
FAUSTO 315
FILO 134
FINA 317
FLAT CIRCLE 233 - 234
FUSION 317

G

GARITA 312
GASTER 311
GEM 41 - 43
GIANNA 147
GINO DL 292
GIULIO 310
GLAM 169
GO SL 293
GOBLET 107
GRID 137
GUARDA 306

H

HORTA 310
HUGO 182

I

IMPRESS 270
INEZ 315
IVIA 317

J

JASMINE 36
JENA 313
JEWELLERY 81
JIL 308
JOSE 313
JUMBLE 315

L

LETA 316
LEXI 251
LIA 308
LIBRA 93 - 95
LIMA 199
LINA 242
LINO 313
LOMO CL 294
LOMO SL 294
LORITA 179
LOYA 189 - 193
LUCE 310
LUCIO 312
LUIS 201
LUMINO 225
LUXE 272
LUZIA 162

M

MAC SL 301

MADA 308
MADISON 171
MAGNOLIA 310
MANHATTTAN 171
MARCO 157
MARESCA 184
MARL 310
MARTIN 266
MARVEL 316
MAURO 221
MEDA 308
MEDEL 219 - 316
MEGAN 309
MELLY 317
MERLO 213
MILO 187
MILTON 313
MINAS 65
MOA 308
MOLI 260
MONIC 101 - 103
MOON 89
MOREN 308
MUSCA 106

N

NANCY 313
NAOMI 109
NEW YORK 174
NICOLA 312
NOBLI 312
NOVIA 141

O

OLTEN 312
ONE 195 - 196
ONEON DL 297 - 298
OSCAR 267
OTAN WL 277
OVAL 308

P

PARC SL 289
PARIA 309
PECTRA 29
PEDRO 185
PERIA 209
PERLE 71 - 72
PICO 129 - 133
PICTOR 316
PIOLI 67
PISTA 217
PLATT 253
POLYGON 281
POLYGON CL 280 - 283
POLYGON WL 278
PONTA 215
POTOS 311
PRINCE 33

Q

QUADRO 286
QUADRY SL 286
QUBY SL 289

R

RAIN 55 - 59
RAME 115
RANGEL 316
RAO 255
RAVA 262
REA 153
RECTAN 235
REDON 263
RESINA 228
RIANO 111 - 113
ROCK 83 - 84
ROD 136
RONBOX SL 290
RONCUB SL 290
RONDOC 285
RONDOO SL 284
RONDUO SL 291
RONTUB SL 291
ROSA 316
ROTA 20

S

SALLY 317
SANDY WL ROUND 274
SANDY WL SQUARE 274
SCROLL 240 - 241
SECTION 273
SEDA 205
SERPENTIS 317
SEVILLE 183
SICA 254
SIERRA 249
SILA 85
SILLO 317
SIMPLE 269
SINES 313
SINTRA 308
SKELETON 135
SKIN 309
SLICE WL 273
SOHO 167
SOLA WL ROUND 276
SOLA WL SQUARE 276
SOLE 143 - 145
SORIA 21
SPARKLES 268
SPAZIO 256 - 257
SQUARE 279
STAG 139
STONE 197

T

TABLE LAMP 307
TANGO 125 - 127
TENSO 307
TIFANNY 317
TOLEDO 265
TOLO 258
TORCH 139
TORI SL 296
TORI SL1 DUO 297
TORNADO 271
TRANSFER WL 275
TREN 229
TREVE 309
TUBA HL 295
TUBA SL 295
TUBIA SL 288
TUBO WL 272
TUBY SL BLACK 288
TUBY SL WHITE 288

V

VALENTI 203
VENTI 166
VENTUS 27
VERO 99
VERTO 310
VIDRO 91
VISION 168
VISTA 61 - 64

W

WIRE 121 - 123

Z

ZODIAC 164 - 165

CODE INDEX

15	*AMEDEO*	17106/4+1
	AMEDEO	17106/3+1
	AMEDEO	17106/2W
	AMEDEO	FC17106/4+1
	AMEDEO	17106/4+1
	AMEDEO	17106/2W
	AMEDEO	FC17106/4+1
16	*CORNELIO*	17106/4+4+1-GLD
17	*ALMERIA*	YSC01
18	*CORIA*	YSC06
19	*CEUTA*	YSC04
20	*ROTA*	YSC14
21	*SORIA*	YSC23
23	*CORATO*	W0475-02A-F4AC
	CORATO	P0475-06A-F4AC
	CORATO	P0475-06A-F7AC
	CORATO	W0475-02A-F7AC
	CORATO	P0475-05A-F4AC
25	*CORATO*	P0475-10C-F7AC
	CORATO	P0475-15C-F4AC
	CORATO	P0475-10C-F4AC
27	*VENTUS*	P0465-05D-F4AC
	VENTUS	P0465-05C-F4AC
	VENTUS	W0465-01B-B5AC
	VENTUS	T0465-01A-F4AC
	VENTUS	C0465-05C-B5AC
	VENTUS	C0465-05D-B5AC
29	*PECTRA*	P0472-06A-F4AC
	PECTRA	W0472-01A-B5AC
	PECTRA	C0472-06A-B5AC
31	*ANZIO*	P0480-04A-F4D7
	ANZIO	P0480-04A-F4AC
	ANZIO	P0480-07A-F4AC
	ANZIO	P0480-09C-F4AC
	ANZIO	W0480-02B-B5AC
33	*PRINCE*	C0360-05B-F4AC
	PRINCE	W0360-01A-B5AC
	PRINCE	P0360-05B-F4AC
	PRINCE	P0360-06D-F4AC
35	*ANTARCTICA*	P0109-04A-F4AC
	ANTARCTICA	W0174-02S-F4AC
	ANTARCTICA	P0174-10A-F4AC
	ANTARCTICA	C0109-04A-F4AC
36	*JASMINE*	W0246-01A-B5AC
37	*BELLA*	W0066-01A-B5B5
39	*CENTAURUS*	0491-06A-F4AC
	CENTAURUS	0491-09A-F7AC
	CENTAURUS	0491-09A-F4AC
	CENTAURUS	0491-06A-F7AC
41	*GEM*	P0389-03D-0FD2
	GEM	P0389-05D-F4AC
	GEM	P0389-03D-F4AC
	GEM	P0389-05D-F7AC
	GEM	P0389-03D-F7AC
43	*GEM*	P0389-01D-0FD2
	GEM	P0389-01D-F7AC
	GEM	P0389-01D-F4AC
	GEM	P0389-01D-L7AC
45	*CRYSTAL*	P0076-03E-F4FZ
	CRYSTAL	P0076-05L-F4FZ
	CRYSTAL	P0076-06X-F4FZ
47	*CRYSTAL*	P0076-03S-F4FZ
	CRYSTAL	P0076-03R-F4FZ
48	*CRYSTAL*	P0076-05M-B5FZ
49	*CRYSTAL*	P0076-03M-B5FZ
	CRYSTAL	P0076-03N-B5FZ
	CRYSTAL	P0076-07M-B5FZ
	CRYSTAL	P0076-01A-F4FZ
50	*CRYSTAL*	F0076-04A-F4FZ
51	*CRYSTAL*	T0076-03E-F4FZ
	CRYSTAL	C0076-06X-F4FZ
	CRYSTAL	C0076-05L-F4FZ
52	*CRYSTAL*	W0076-01A-B5FZ
	CRYSTAL	W0076-01D-F4FZ
	CRYSTAL	W0076-02A-B5FZ
53	*BIAGIO*	MD1318-5
55	*RAIN*	P0076-05L-F7L9
	RAIN	C0076-05L-F4L9
	RAIN	W0076-01A-B5L9
56	*RAIN*	P0076-06X-F4K9
	RAIN	P0076-05L-F4K9
57	*RAIN*	P0076-03E-F4K9
	RAIN	P0076-03S-F4K9
	RAIN	P0076-01D-F4K9
58	*RAIN*	T0076-03D-F4K9
59	*RAIN*	C0076-06X-F4K9
	RAIN	C0076-05L-F4K9
	RAIN	C0076-01D-F4K9
	RAIN	W0076-01D-F4K9
61	*VISTA*	C0076-06K-F4GQ
	VISTA	C0076-05K-F4GR
	VISTA	C0076-06K-F4GR
	VISTA	C0076-05K-F4GQ
63	*VISTA*	P0076-06K-F4GQ
	VISTA	P0076-05K-F4GR
	VISTA	P0076-06K-F4GR
	VISTA	P0076-05K-F4GQ
64	*VISTA*	W0076-01B-B5GQ
	VISTA	W0076-01E-F4GQ
	VISTA	W0076-01B-B5GR
	VISTA	W0076-01E-F4GR
65	*MINAS*	P1401-01A-F4FZ
67	*PIOLI*	P0369-01D-F4GW
	PIOLI	W0369-01A-B5GR
	PIOLI	P0369-01A-F4GR
	PIOLI	P0369-03A-B5GR
	PIOLI	P0369-01A-F4GQ
	PIOLI	W0369-01A-B5GW,
69	*AURELIA*	P0404-01A-F4AC
	AURELIA	W0404-01A-B5AC
71	*PERLE*	P0226-01A-F4RK
	PERLE	P0226-03B-F4RK
	PERLE	W0226-01A-F4RK
72	*PERLE*	P0226-04H-B5RK
	PERLE	P0226-05B-F4RK
73	*CIRO*	MD1458-1L
75	*ARTEMIDA*	RLD92193-6
	ARTEMIDA	RLL94123-4
	ARTEMIDA	RLD92193-5
77	*BLINK*	P0173-05W-F4B3
	BLINK	C0173-07W-B5B3
	BLINK	P0173-07W-F4B3
78	*BLINK*	W0173-02A-F4B3
79	*BLINK*	P0173-03Y-F4B3
	BLINK	T0173-04W-F4B3
81	*JEWELLERY*	W1550-01A-F4B3
	JEWELLERY	P1550-03A-F4B3
	JEWELLERY	P1550-05A-F4B3
83	*ROCK*	P0488-03D-B5AC
	ROCK	P0488-01F-F4AC
	ROCK	P0488-01A-F4AC
	ROCK	P0488-01B-U8AC
84	*ROCK*	P0488-04F-B5AC
	ROCK	T0488-01A-U8AC
	ROCK	W0488-01A-B5AC
85	*SILA*	MD1510-1
87	*BRESSO*	OYD-10231A-SP1
	BRESSO	OYD-10231B-SP1
	BRESSO	OYD-10231C-SP1
89	*MOON*	OYD-10381A-SP1
	MOON	OYD-10381C-SP1
	MOON	OYD-10381B-SP1
91	*VIDRO*	OYD-10063A-SP1
	VIDRO	OYD-10063B-SP1
	VIDRO	OYD-10063C-SP1
93	*LIBRA*	MD2128A-3W
	LIBRA	MD2128A-3R
	LIBRA	MD2128A-3S
95	*LIBRA*	MD2128-1R
	LIBRA	MD2128B-3S
	LIBRA	MD2128-1S
	LIBRA	MD2128B-3W
	LIBRA	MD2128-1W
	LIBRA	MD2128B-3R
97	*CHAMPAGNE*	MD2101-1S
	CHAMPAGNE	MD2101A-3S
	CHAMPAGNE	MD2101-1W
	CHAMPAGNE	MD2101A-3W
98	*CHAMPAGNE*	MD2101B-3S
	CHAMPAGNE	MD2101B-3W
99	*VERO*	MD1621-1
101	*MONIC*	MD1629-3A
	MONIC	MD1629-3A
	MONIC	MD1629-1
	MONIC	MD1629-1
	MONIC	MD1629-1
103	*MONIC*	MD1629-3B
	MONIC	MD1629-5B
	MONIC	MD1629-3B
	MONIC	MD1629-5B
105	*BERO*	DC-6042B
	BERO	DC-6042C
	BERO	DC-6042D
106	*MUSCA*	MD2129-1W
107	*GOBLET*	MD1633-1
109	*NAOMI*	W1305-01S-A0AB
	NAOMI	P1305-01S-F4AB
	NAOMI	P1305-03S-B5AB
111	*RIANO*	P0454-08C-SDGF
	RIANO	P0454-12C-SDGF
113	*RIANO*	W0454-02D-SDAC
	RIANO	P0454-08D-SDAC
	RIANO	W0454-02A-SDAA
	RIANO	P0454-08D-SDAA
115	*RAME*	OYD-10327B-SP1
	RAME	OYD-10300A-SP1

	RAME	OYD-10327A-SP1
	RAME	OYD-10298B-SP1
117	*DONATO*	P0310-01H-F4GP
	DONATO	P0310-03H-B5GP
119	*CHANDELIER*	MC2070-5BL
	CHANDELIER	MB2070-1BL
121	*WIRE*	MD1712-1L
123	*WIRE*	MD1712-1A
	WIRE	MD1712-1B
125	*TANGO*	MD1104-2
	TANGO	MD1104-2L
127	*TANGO*	MX1104-2L
	TANGO	MX1104-2
129	*PICO*	MD9023-1L
	PICO	MD9023-1S
131	*PICO*	MD9023-3B
133	*PICO*	MX9023-1L
	PICO	MT9023-1S
134	*FILO*	MD1452-1L
135	*SKELETON*	HP1335-WH
	SKELETON	HP1335-BL
136	*ROD*	HP1463-BL
137	*GRID*	HP1428,
139	*ATOM*	HP1799-30-BL
	STAG	HP1776-BL
	TORCH	HP1423A-20-BL
140	*CANDEL*	HP1811-12
141	*NOVIA*	RLD94217-6A
143	*SOLE*	P0317-03H-S8A1
	SOLE	P0317-06H-S8A1
	SOLE	P0317-05H-S8A1
145	*SOLE*	C0317-06C-S8A1
	SOLE	C0317-04C-S8A1
	SOLE	W0317-02K-S8A1
147	*GIANNA*	P0386-4A-B5AC
	GIANNA	P0386-01A-F4AC
149	*CESARE*	RLL94350-5A
	CESARE	RLD94350-5A
	CESARE	RLT94350-3B
	CESARE	RLL94350-5B
	CESARE	RLD94350-5B
	CESARE	RLT94350-3A
151	*ANDREA*	HP1392-500-BL+PB
	ANDREA	HP1392-C-500-BL+PB
153	*REA*	RLD93163-1W
	REA	RLT93163-1W
	REA	RLT93163-1B
	REA	RLL93163-1B
	REA	RLD93163-1B
	REA	RLL93163-1W
155	*CANDE*	TS-110611P-CH
	CANDE	TS-110611P-BK
	CANDE	TS-110611P-WH
	CANDE	TS-140605W-BK
156	*DOTS*	TS-081111P-BK
157	*MARCO*	TS-101015P-BKGO
159	*ANTENNE*	TS-090522F-BK
	ANTENNE	TS-090522F-BKSI
	ANTENNE	TS-090522F-WHSI
	ANTENNE	TS-140123F-BKG0
160	*ANTENNE*	TS-071003PM-BKGO
161	*ANTENNE*	TS-071003P-BKSI
	ANTENNE	TS-071003P-WHSI
	ANTENNE	TS-071003P-BKGO
	ANTENNE	TS-120404P-BKGO
162	*LUZIA*	TS-050402F-BKGO
163	*BRANCA*	TS-5805-BKGO
164	*ZODIAC*	TS-5805
165	*ZODIAC*	TS-5805-BK
166	*VENTI*	TS-5805G-RE
	VENTI	TS-5805G
167	*SOHO*	TS-010121MM
168	*VISION*	TS-010121W
169	*GLAM*	TS-010121WC
171	*MADISON*	TS-061121F
	MANHATTTAN	TS-061121M
172	*AMADO*	SL556-CH
173	*AMADO*	SL556-CO
174	*NEW YORK*	MJ65-3, 3xE14
175	*BELLO*	RLT93224-1B
	BELLO	RLT93224-1A
177	*DECO*	TS-06216F-BK
	DECO	TS-06216T-CHWH
	DECO	TS-06216T-BK
	DECO	TS-06216F-CHWH
179	*LORITA*	TS-110314F-WH
	LORITA	TS-110314F-BK
180	*COSTANZA*	TS-070720F-WH
181	*COSTANZA*	TS-070720F-BK
182	*HUGO*	TS-120630F-BK
183	*SEVILLE*	TS-062909F-BR
184	*MARESCA*	TS-170429F-BK
	MARESCA	TS-170429F-WH
185	*PEDRO*	SL570-2-SS+GR
186	*ENERGY*	TS-065909F
187	*MILO*	SL598-CH
189	*LOYA*	P0461-11A-B5SC
	LOYA	P0461-09C-B5F4
	LOYA	P0461-09C-B5SC
	LOYA	P0461-09C-B5SB
191	*LOYA*	P0461-01A-L7L7
	LOYA	P0461-01A-S8S8
	LOYA	P0461-01A-F7F7
	LOYA	P0461-01A-F4F4
	LOYA	P0461-01A-L8L8
	LOYA	P0461-01A-K4K4
193	*LOYA*	W0461-01A-S8S8
	LOYA	W0461-01A-F7F7
	LOYA	W0461-02B-S8S8
	LOYA	W0461-02B-F7F7
	LOYA	W0461-02B-F4F4
	LOYA	W0461-02B-L8L8
195	*ONE*	P0461-01E-S8S8
	ONE	P0461-09L-B5F7
	ONE	P0461-09L-B5S8
	ONE	P0461-09L-B5F4
	ONE	P0461-01E-F4F4
	ONE	P0461-01E-F7F7
196	*ONE*	P0461-11L-B5F7
	ONE	W0461-02E-F4F4
	ONE	P0461-11L-B5F4
	ONE	W0461-02E-F7F7
	ONE	P0461-11L-B5S8
	ONE	W0461-02E-S8S8
197	*STONE*	HP1342
199	*LIMA*	15010002
	LIMA	15010003
200	*FALCON*	15200002
201	*LUIS*	HSP5291C-CH
203	*VALENTI*	MX48002-4
	VALENTI	MX48002-2B
205	*SEDA*	MP57054-2A
	SEDA	MB920125-1
207	*BALVI*	MP57043-2
	BALVI	MP57056-A
209	*PERIA*	MP57054-A
	PERIA	MP57055-B
	PERIA	MP82024-1A
	PERIA	MX57054-B
	PERIA	MX57055-A
211	*DARIO*	MX48006-3K
	DARIO	MP48006-1H
212	*CLORIN*	L170402-6
213	*MERLO*	PL170826-6
215	*PONTA*	PL170855-4
	PONTA	PL170855-5
217	*PISTA*	L99833-1
	PISTA	L99832-1
218	*CROSS*	PL99829-6
219	*MEDEL*	SL489/CH
221	*MAURO*	HP1419-C4
	MAURO	HP1419-F
223	*BELLE*	PL170514-2
	BELLE	PL170511-3
225	*LUMINO*	PL99843A-6
	LUMINO	PL99843C-3
226	*CARRELLO*	PL1100014-3
227	*CARRELLO*	PL1100014-5
	CARRELLO	00312
	CARRELLO	0044
228	*RESINA*	L170221-3
229	*TREN*	MF48060-1
231	*CIRCLE*	L-CD-01
	CIRCLE	L-CD-03
	CIRCLE	L-CD-04
232	*CIRCLE*	L-CD-03-BL
233	*FLAT CIRCLE*	L-XX-10
234	*FLAT CIRCLE*	L-CD-660-BL
235	*RECTAN*	L171209-5
237	*DORIS*	MD1703-1
	DORIS	MD1703-3B
	DORIS	MD1703-4A
239	*ENZO*	MD1622-1
	ENZO	MD1622-3B
	ENZO	MB1622-1
240	*SCROLL*	L171122C
241	*SCROLL*	L171122B
242	*LINA*	L180315C
243	*ALTA*	RLX96700-1
244	*ADEM*	E9371-37-LED-GR
	ADEM	E9371-37-LED-BL
245	*ASCONA*	L180301-8C
247	*BELLIS*	12080021
	BELLIS	12080022
249	*SIERRA*	12100006-SL

CODE INDEX

	SIERRA	12100005-SL
	SIERRA	12100006-GD
	SIERRA	12100005-GD
251	*LEXI*	L180109-3C
	LEXI	PL180109-6C
253	*PLATT*	PL180407-1
	PLATT	PL180407-3
254	*SICA*	CK99892-1
	SICA	CK99892-2
	SICA	CK99892-4
255	*RAO*	CK99893-1
	RAO	CK99893-2
	RAO	CK99893-3
256	*SPAZIO*	CK99603A-1
	SPAZIO	CK99603A-4
	SPAZIO	CK99603A-2
	SPAZIO	CK99603A-3
257	*SPAZIO*	CK99603A-1B
	SPAZIO	CK99603A-2B
	SPAZIO	CK99603A-3B
	SPAZIO	CK99603A-4B
258	*TOLO*	CK161213-1
	TOLO	CK161213-2
	TOLO	CK161213-4
259	*COSTA*	CK170208-3
	COSTA	CK170208-2
	COSTA	CK170208-1
260	*MOLI*	CK170205-2
	MOLI	CK170205-4
	MOLI	CK170205-1
261	*ALEX*	CK99515-1W
	ALEX	TK99515-2W
	ALEX	TK99515-3W
	ALEX	TK99515-4W
262	*RAVA*	CK100008-1
	RAVA	TK100008-2
	RAVA	CK100008-4
263	*REDON*	CK170901-1
	REDON	CK170901-4
	REDON	CK170901-2
	REDON	CK170901-3
264	*ELIA*	CK8038-1
	ELIA	CK8038-2
	ELIA	CK8038-3
265	*TOLEDO*	CK170815-1
	TOLEDO	TK170815-2
	TOLEDO	TK170815-3
	TOLEDO	CK170815-4
266	*MARTIN*	TK171206-2
	MARTIN	TK171206-4
	MARTIN	CK171206-1
	MARTIN	L171207-5
	MARTIN	TK171206-3
267	*OSCAR*	CK170519-1
	OSCAR	CK170519-2
	OSCAR	CK170519-3
	OSCAR	CK170519-4
268	*SPARKLES*	CK180113-1
	SPARKLES	CK180113-2
	SPARKLES	CK180113-4
269	*SIMPLE*	1390
270	*IMPRESS*	1444
271	*TORNADO*	1376
272	*LUXE*	AWG9-046
	LUXE	AWG9-047
	LUXE	AWG9-048
	TUBO WL	20034-BK
	TUBO WL	20034-CH
273	*SECTION*	1005-B/G
	SLICE WL	50603-WH
	SLICE WL	50603-BK/GD
274	*SANDY WL RO*	92696
	SANDY WL RO	92695
	SANDY WL SQ	92698
	SANDY WL SQ	92697
275	*TRANSFER WL*	90842
	TRANSFER WL	90841
	TRANSFER WL	91066
	TRANSFER WL	90841
276	*SOLA WL ROU*	91060
	SOLA WL ROU	91061
	SOLA WL SQU	91062
	SOLA WL SQU	91063
277	*OTAN WL*	20079-WH
	OTAN WL	20080-WH
	OTAN WL	20079-BK
	OTAN WL	20080-BK
278	*POLYGON WL*	20070-AL
	POLYGON WL	20070-BK
	POLYGON WL	20070-WH
	POLYGON WL	20070-GD
279	*SQUARE*	50475-BK
	SQUARE	50475-WH
	SQUARE	50475-CH
280	*POLYGON CL*	20067-WH
	POLYGON CL	20036-BK
	POLYGON CL	20036-WH
	POLYGON CL	20067-AL
	POLYGON CL	20067-BK
	POLYGON CL	20036-AL
281	*POLYGON*	20037-BK
	POLYGON	20037-WH
282	*POLYGON CL*	20077-WH
	POLYGON CL	20077
	POLYGON CL	20077-BK
	POLYGON CL	20077-AL
283	*POLYGON CL*	20035-WH
	POLYGON CL	20035-BK
	POLYGON CL	20035-GD
	POLYGON CL	20035-AL
284	*RONDOO SL*	50407-BK
	RONDOO SL	50407-GD
	RONDOO SL	94354
	RONDOO SL	44805
	RONDOO SL	45519
	RONDOO SL	89201
	RONDOO SL	50407-WH
285	*DEEP SL*	89313
	RONDOC	20038-WH
	RONDOC	20038-BK
286	*QUADRO*	89200-BK
	QUADRO	89200-GD
	QUADRO	89200-WH
	QUADRY SL	20039-BK
	QUADRY SL	20039-WH
287	*BOX*	50631
	BOX	50630
	BOX SL	89947
	BOX SL	90432
	BOX SL	90433
	BOX SL	89949
288	*TUBIA SL*	ACGU10-138
	TUBIA SL	ACGU10-139
	TUBY SL BLAC	ACGU10-133
	TUBY SL WHIT	ACGU10-132
289	*PARC SL*	ACGU10-128
	PARC SL	ACGU10-129
	QUBY SL	ACGU10-131
	QUBY SL	ACGU10-130
290	*RONBOX SL*	ACGU10-064
	RONBOX SL	ACGU10-065
	RONCUB SL	ACGU10-136
	RONCUB SL	ACGU10-137
291	*RONDUO SL*	ACGU10-062
	RONDUO SL	ACGU10-063
	RONTUB SL	ACGU10-135
	RONTUB SL	ACGU10-134
292	*GINO DL*	20006-WH
	GINO DL	20006-BK
	GINO DL	20005-WH
	GINO DL	20005-BK
293	*GO SL*	50484
	GO SL	89964
	GO SL	50485
	GO SL	89962
294	*LOMO CL*	20001-BK
	LOMO CL	20001-WH
	LOMO SL	20003-WH
	LOMO SL	20003-BK
	LOMO SL	20004-BK
	LOMO SL	20004-WH
295	*TUBA HL*	20023-WH
	TUBA HL	20023-BK
	TUBA SL	92679
	TUBA SL	92680
296	*TORI SL*	20016-BK
	TORI SL	20015-WH
	TORI SL	20015-BK
	TORI SL	20016-WH
	TORI SL	20014-BK
	TORI SL	20014-WH
297	*ONEON DL*	94363-BK
	ONEON DL	94363-WH
	ONEON DL	94364-BK
	ONEON DL	94364-WH
	TORI SL1 DUO	ACGU10-126
	TORI SL1 DUO	ACGU10-127
298	*ONEON DL*	94361-WH
	ONEON DL	94362-BK
	ONEON DL	94361-BK
	ONEON DL	94362-WH
299	*BOXY DL*	20071-WH
	BOXY DL	20071-BK
	BOXY DL	20072-BK
	BOXY DL	20072-WH
	BOXY DL	20073-WH
	BOXY DL	20073-BK
300	*BOXY CL*	20075-WH

	BOXY CL	20076-BK
	BOXY CL	20075-BK
	BOXY CL	20074-BK
	BOXY CL	20074-WH
	BOXY CL	20076-WH
301	*MAC SL*	ACGU10-141
	MAC SL	ACGU10-140
	MAC SL	ACGU10-142
	MAC SL	ACGU10-143
302	*CHUCK DL RO*	92699
	CHUCK DL RO	92700
	CHUCK DL RO	92702
	CHUCK DL SQ	92704
	CHUCK DL SQ	92706
	CHUCK DL SQ	92703
303	*CHUCK DL SQ*	92699-GD
	CHUCK DL SQ	20068-BK
	CHUCK DL SQ	20068-WH
	CHUCK DL SQ	20069-WH
	CHUCK DL SQ	20069-BK
	CHUCK DL SQ	92703-GD
306	*ALICE*	P18230-D60-BK
	ARIS	F18016-2
	BRAGA	A012-S
	CASTO	P110839-D30
	CHAVEZ	A146
	COLTEN	CL15008A-3CLA
	DALBERT	CL16086-1P D50
	EVORA	A153
	EVORA	A153-L
	GUARDA	A044A-L
	GUARDA	A044A-S
307	*BRAVA*	CL16022-6
	BRAVA	CL16022-1
	BRAVA	CL16022-3
	EXPIR	T18057-WH
	TABLE LAMP	H1848
	TABLE LAMP	H1633
	TABLE LAMP	H1869
	TABLE LAMP	H1408S-WH
	TABLE LAMP	1601
	TABLE LAMP	H1408S-BCK
	TENSO	F18014-GU10-C
	TENSO	F18014-GU10-BK
308	*JIL*	P16130A-1
	JIL	P16130A-5
	LIA	CL15068SQ-D40
	MADA	A093-L
	MEDA	A005
	MOA	CL15068SQ-D40
	MOA	CL15068C-D40
	MOREN	CL18021-D40
	OVAL	P14071-D35
	SINTRA	P749A
309	*MEGAN*	T15027-1P
	MEGAN	F074
	PARIA	P15090-5
	PARIA	T15027
	PARIA	P15090-3
	PARIA	A001
	PARIA	P15090A-1W
	SKIN	P18055
	TREVE	P15090-1
310	*CUBE*	P17084-D20
	ELSTRA	P16151-BK
	ELSTRA	P16151-WH
	GIULIO	P12105-L-5
	HORTA	P14030C-5
	HORTA	P14030C
	LUCE	RLD92132-5
	MAGNOLIA	RLD94016-5A
	MAGNOLIA	RLB94016-2B
	MAGNOLIA	RLB94016-2A
	MAGNOLIA	RLD94016-5B
	MARL	P17212
	VERTO	P16182-D57
	VERTO	P16180A-D44
311	*AQUA*	LED16046-2B
	AQUA	LED16046-3R
	AQUA	LED16046-1R
	BALVE	G917006-3R
	BALVE	G917006-2B
	BALVE	G917006-1R
	DRISO	LED16032A-2TU
	DRISO	LED16032A-1R
	DRISO	LED16032A-3SP
	GASTER	GU16016-4TU2-BK
	GASTER	GU16016-3TU-WH
	GASTER	GU16016-3TU-BK
	GASTER	GU16016-2TU-WH
	GASTER	GU16016-2TU-BK
	GASTER	GU16016-1R-BK
	GASTER	GU16016-1R-WH
	GASTER	GU16016-4TU2-WH
	POTOS	CL13077C-4 (B)
312	*BERN*	LED17008-4R
	BERN	LED17008-1R
	BERN	LED17008-2TU
	BRUNO	WL243B
	BRUNO	WL243B-3P
	CLARA	CL12029-D40-WH
	CLARA	CL12029-D30-WH
	CLARA	CL12029-D40-BK
	CLARA	CL12029-D30-BK
	CLOE	CL16157-3
	GARITA	T51S-BK
	GARITA	T51S-WH
	LUCIO	CL13110-D40
	LUCIO	CL13110-D60
	NICOLA	G916008-5CL
	NICOLA	G916008-1R
	NOBLI	WL16015
	NOBLI	WL16016
	OLTEN	R5017002-5CL
	OLTEN	R5017002-1R
	OLTEN	R5017002-2S
313	*AGGEO*	P15103-1CL-D45
	ALBI	P17194-1W
	ALBI	P17194-3
	BLOIS	P16194-BK
	BLOIS	P16194-WH
	CLAMART	P15091-5
	CLAMART	P15091-1W
	JENA	P17106-7
	JOSE	P15079-1F
	JOSE	P15079-1T
	JOSE	P15079-D22
	LINO	F16026-1T
	LINO	F16026
	MILTON	P15238A
	NANCY	P17135
	SINES	P16150-D30
	SINES	P16150-1T(D30)
314	*ALEX*	RLX94874-5
	BENTO	RLD931021-1
	BULB	RLD93024-1A
	BULB	RLL93024-1A
	CAFE	RLX93139-4A
	CAFE	RLX93139-4B
	CAFE	RLD93139-4LA
	CAFE	RLD93139-4LB
	CAFE	RLD93139-4B
	CAFE	RLD93139-4A
	CAFE	RLD93139-4C
	CANINI	RLD92709-6
	CARMEN	RLD94103-5
	CARMEN	RLD94103-3
315	*CERI*	RLT94118-1B
	CLOE	RLB94875-1
	ELBA	RLD94104-1C
	FAUSTO	RLD931019-3
	INEZ	RLD93023-3A
	INEZ	RLD93023-2A
	INEZ	RLX93023-2A
	INEZ	RLX93023-3A
	JUMBLE	RLX92067-5B
	JUMBLE	RLX92067-3B
	JUMBLE	RLX92067-8B
	JUMBLE	RLL92067-3
316	*LETA*	RLD93350-1W
	LETA	RLD93350-1B
	LETA	RLT93350-1A
	LETA	RLT93350-1B
	LETA	RLD93350-L1B
	LETA	RLD93350-L1W
	MARVEL	RLT93178-1A
	MEDEL	RLX94188-4
	PICTOR	RLB94023-1B
	PICTOR	RLX94023-3W
	PICTOR	RLX94023-3B
	PICTOR	RLB94023-1W
	RANGEL	RLX92711-5
	ROSA	RLD92093-3
	ROSA	RLD92093-4
317	*AMY*	P12168I
	CARMEN	RLB94103-1
	COSI	RLX94775-3
	FINA	P18035-4
	FINA	P18035-1
	FUSION	RLX93410-1
	IVIA	P12082D-D25
	IVIA	P12082D-3
	MELLY	P17247-D40
	MELLY	P17247-1F
	SALLY	T16079
	SERPENTIS	RLX92350-20
	SILLO	P14120-1
	SILLO	P14120-3
	TIFANNY	P17127-4

Zastrzegamy sobie prawo do dokonania zmian ofertowych i konstrukcyjnych. Z uwagi na proces druku przedstawione kolory mogą się różnić od rzeczywistych.

We reserve the rights to make changes in the product range, design and model. Please note that, as a result of printing processes, actual colors may vary from those reproduced here.

POLSKA

Zuma Line Sp. z o.o.
ul. Generała Józefa Zajączka 9
40-050 Katowice

BIURO / OFFICE
tel. +48 32 730 66 10
biuro@zumaline.pl
office@zumaline.com

Adriana Lewandowska
Sales Manager
tel. kom. +48 781 850 010
adriana.lewandowska@zumaline.pl

Arkadiusz Flasiński
Sales Manager
tel. kom. +48 515 117 551
arkadiusz.flasinski@zumaline.pl

Barbara Starek
Sales Manager
tel. kom. +48 32 730 66 13
e-mail barbara.starek@zumaline.pl

Maciej Filosek
Sales Director
tel. kom. +48 785 991 109
maciej.filosek@zumaline.pl

EXPORT DEPARTMENT
office@zumaline.com
export@zumaline.pl

Feliks Ilnicki
Export Manager
tel. kom. +48 695 653 169
feliks.ilnicki@zumaline.pl

Wojciech Wesoły
Export Manager
tel. +48 695 651 802
wojciech.wesoly@zumaline.pl

PRZEDSTAWICIELE

Dominik Bloch
Przedstawiciel Handlowy
Polska północno - zachodnia
i południowo - zachodnia
tel. kom. +48 723 350 022
dominik.bloch@zumaline.pl

Arkadiusz Lis
Przedstawiciel Handlowy
Polska centralna i południowo - wschodnia
tel. kom. +48 723 970 011
arkadiusz.lis@zumaline.pl

Artur Złotkowski
Przedstawiciel Handlowy
Polska północno – wschodnia
tel.kom. +48 721 991 030
artur.zlotkowski@zumaline.pl

Dział reklamacji
tel. kom +48 32 783 22 90
dzial.reklamacji@zumaline.pl

Magazyn Zuma Line
Al. Roździeńskiego 93
tel. kom +48 721 345 515
40-203 Katowice

OFFICIAL DISTRIBUTORS

HUNGARY
Elter Világítás Kft.
www.elter.hu
Hungary
Showrooms:
7100 Szekszárd, Sport utca 2/a.
1095 Budapest, Lechner Ödön fasor 2.

SLOVAKIA
Ing.Ivan Labanc
ul. Duklianska 38
052 01 Spišská Nová Ves
tel.: +42153 44 14 283
email: labanc@svietidla-labanc.sk
www.svietidla-labanc.sk

PORTUGAL
DOMOLED, Lda.
Nucleo Empresarial da Abrunheira
Zona Poente, Pav.4
Abrunheira 2710-089 Sintra
tel.: +351 219 111 201
+351 911 003 235
email: geral@domoled.pt www.domoled.pt

UKRAINA (УКРАЇНА)
ПП „ЕлеКомп" EleKomp
вул. М.Грушевського 58
82107 м. Дрогобич, Львівська обл.
моб. +380673533757, моб. +380978606839
тел/факс: +380324438328
e-mail: elekomp@ukr.net
www.elekomp.com.ua

ТзОВ „Лайт Хауз"
тел. +38 (032) 253 40 08
моб. тел. +38 0677099103
e-mail: HYPERLINK „mailto:svitlo.lighthouse@gmail.com"
svitlo.lighthouse@gmail.com
Showroom: м.Львів, вул. Б.Хмельницького, 188, ТЦ „Нова Маркет"

ТОВ «ПРОФОРМА"
Україна, м.Київ, пр. Воздухофлотський, 56
тел. (+38) 098 193-22-22, (+38) 097 552-20-14
zakaz@proforma.kiev.ua
www.proforma.kiev.ua

CZECH REPUBLIC
Elusia - PTR s.r.o.
Sazavska 2032/30
120 00 Praha 2
partner@elusia.cz http://www.elusia.cz/
tel. +420 776 732 018

VIENNA LIGHT POINT
ESYST s.r.o.
Vídeňská 101/119,
619 00 Brno
telefon: +420 541 233 424
Email: esyst@esyst.cz
www.luxprim.cz

UNITED KINGDOM & IRELAND
Yuvilite Ltd
220-222 The Broadway
West Hendon
London NW9 7EE
T: 020 8202 1355
E: sales@zumaline.co.uk
www.zumaline.co.uk

BULGARIA
Гала Колекционе Еоод
ул. Бистришко шосе 1В
п.к. 1756, София, България
моб: +359879333679, моб: +359889535279
office@esteta.bg
www.esteta.bg www.zumaline.bg

RUSSIA
ООО ПРОСПЕКТ
МОСКВА
Ул. Маршала Бирюзова д.1
Тел.: +7 (495) 540-40-79
www.zumaline.ru
info@zumaline.ru